MSAM120

TVAM05N

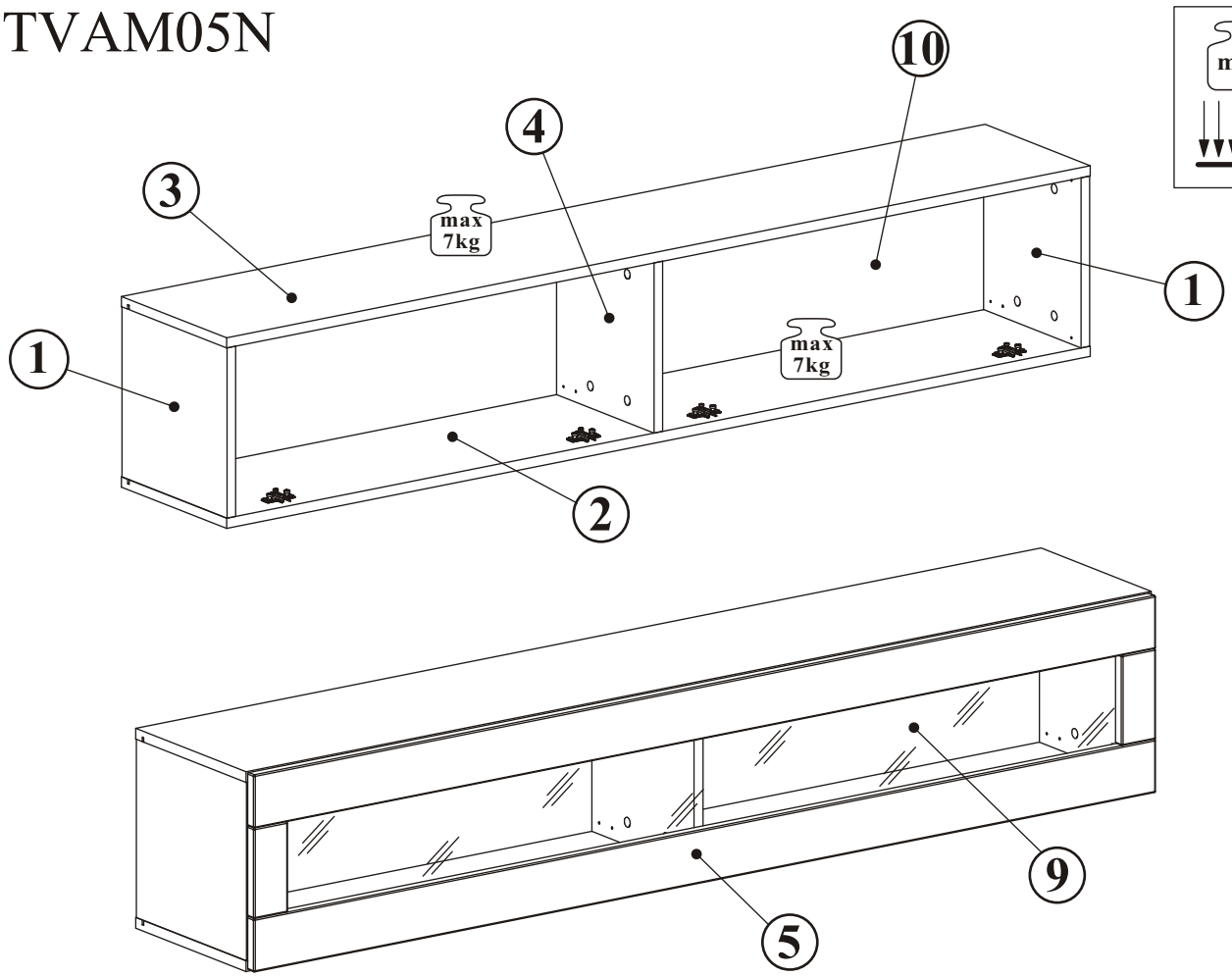

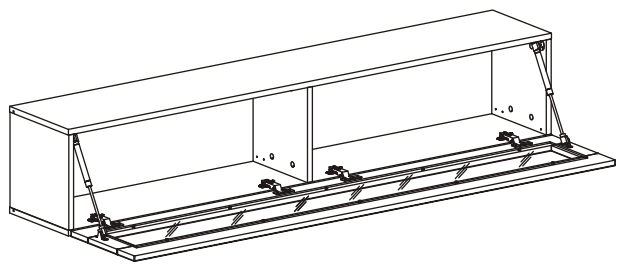

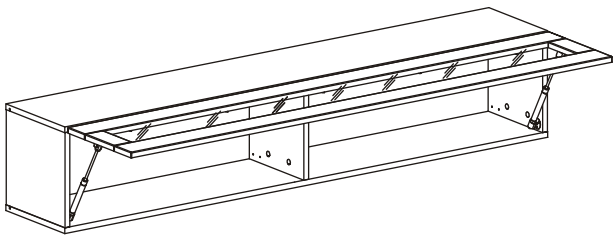

kl	a ãã K		` çãKlk ç	n íó
N	OSU	OTQ	N	O
O	NSMD	OTQ	N	N
P	NSMD	OTQ	N	N
Q	OSU	OQQ	N	N
NM	NRUM	OUM	N	N
R	NRVS	OVS	N	N
V	NQVS	NTS	N	N

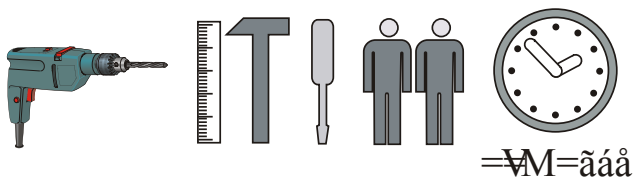

^N ñNO İ UñPS	_Q ñNO	_R ñNO İ NRñNO	dR ñNO	bO ñQ eZM	bN ¯ OS ñQ eZM
qN ñO	_lN ñO	pN ñNO	woN ñP	aS ñS rp ¯ PIRñPM	aNM ñOO rp ¯ PIRñNP
rmNP ñNO rm ¯ PñNS	dO ñN	hoO ñP	mO ñNM	_mN ñO	

0 mm 10 20 30 40 50 60

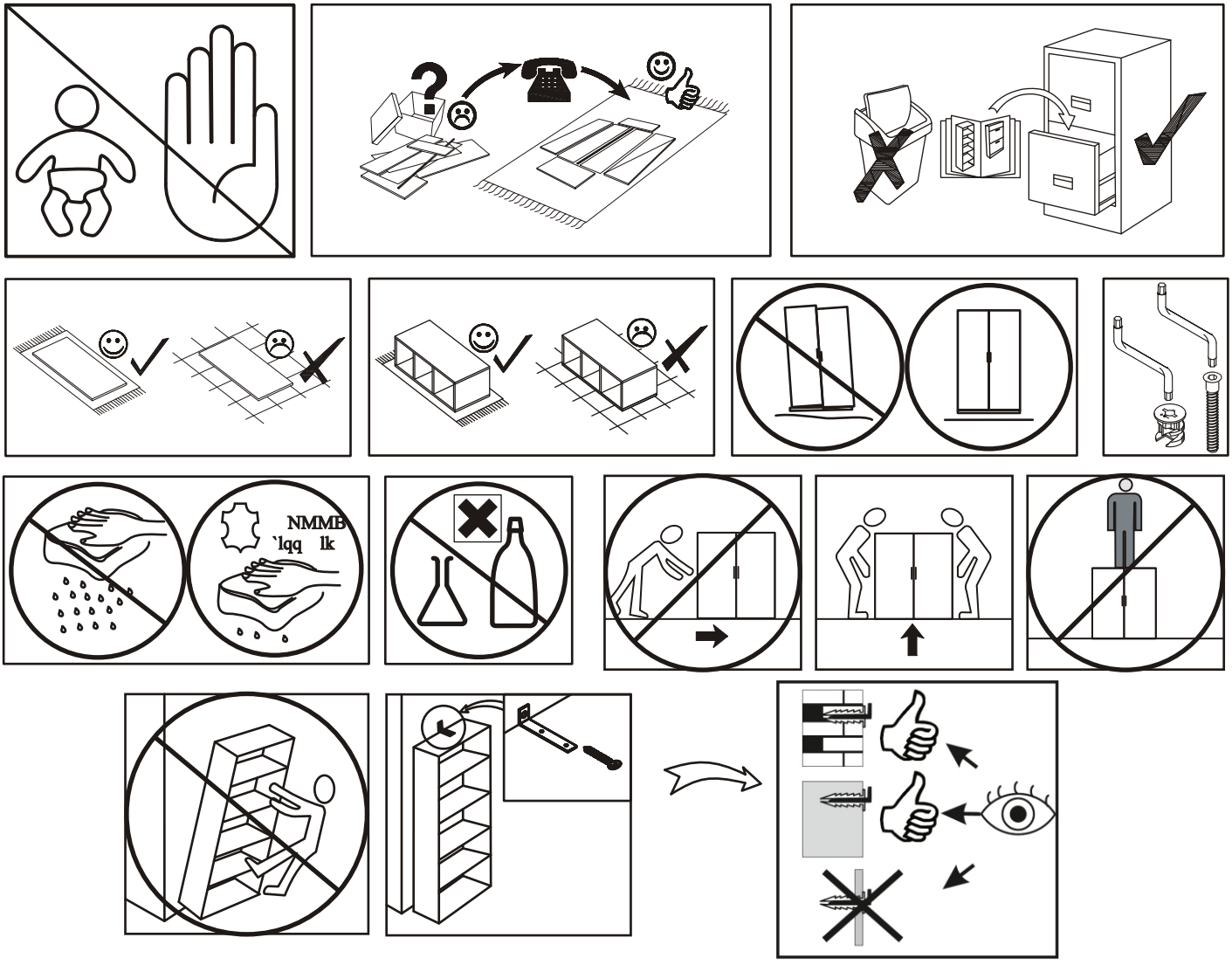

1

_R	^N
ñNO	ñNO
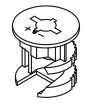	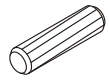
İ NRñNO	İ UñPS

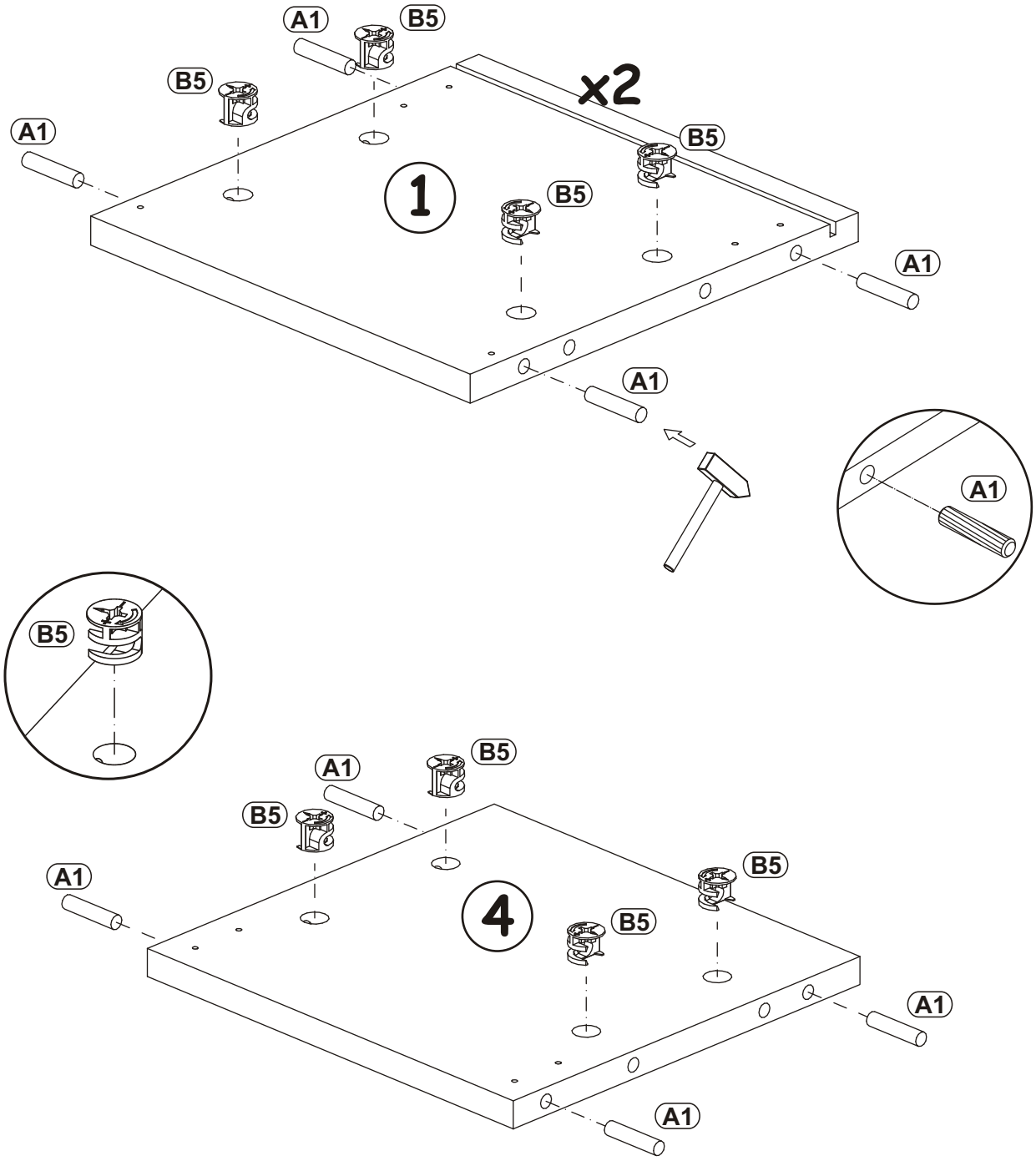

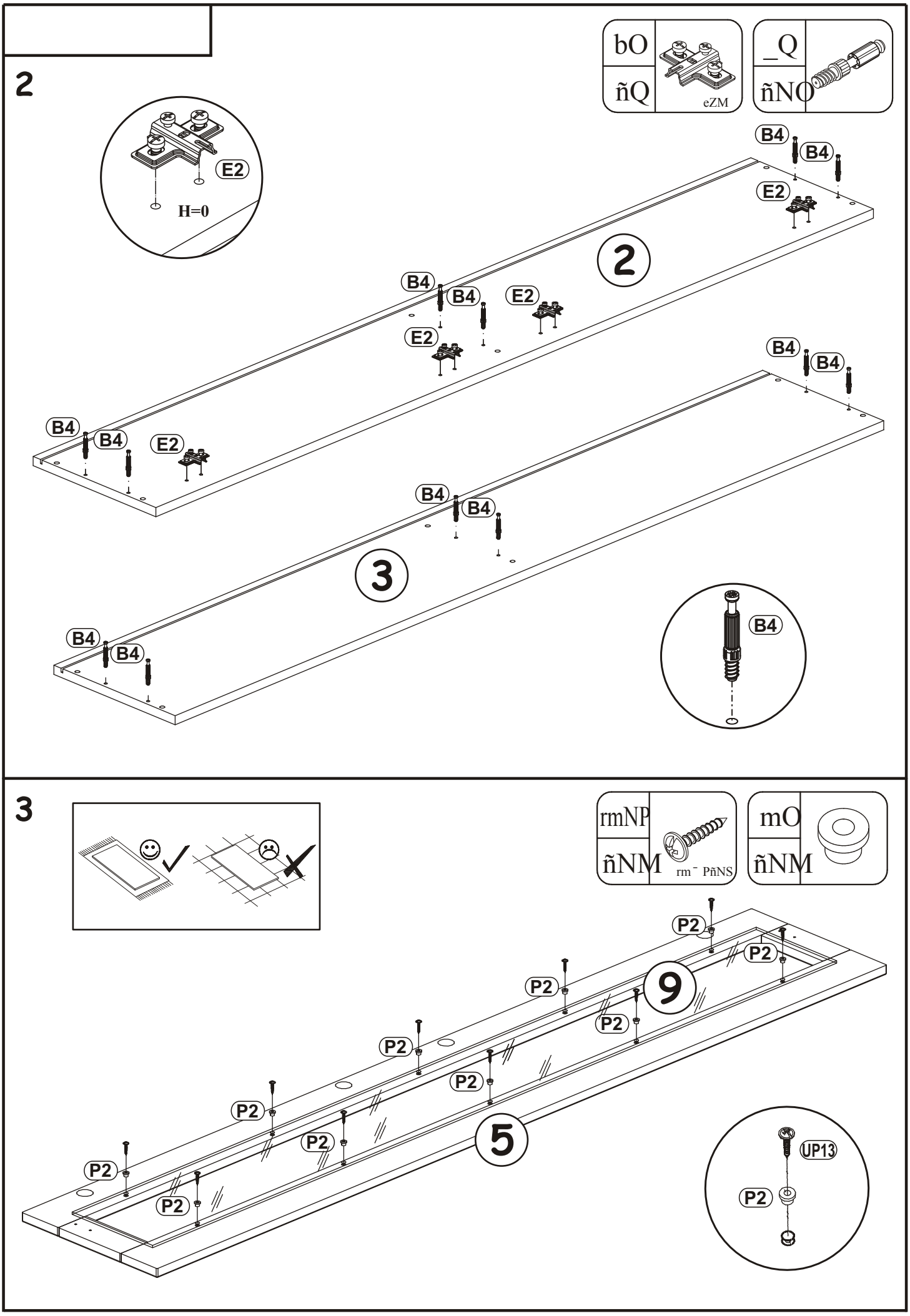
2
bO
ñQ
eZM
_Q
ñNO
E2
H=0
B4
B4
E2
2
B4
B4
E2
E2
B4
B4
B4
E2
B4
B4
3
B4
B4
B4
3
rmNP
ñNM
rm¯ PñNS
mO
ñNM
P2
P2
P2
9
P2
P2
P2
P2
P2
P2
5
UP13
P2

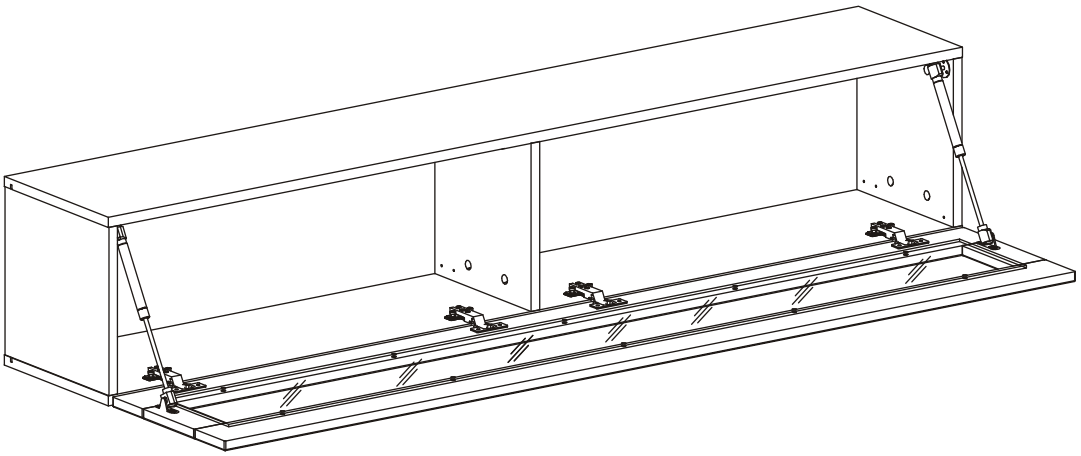

4 - 11

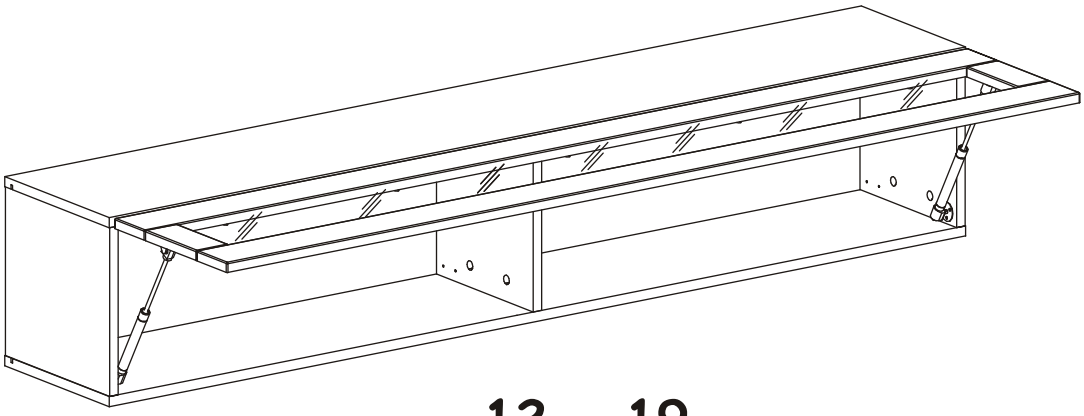

12 - 19

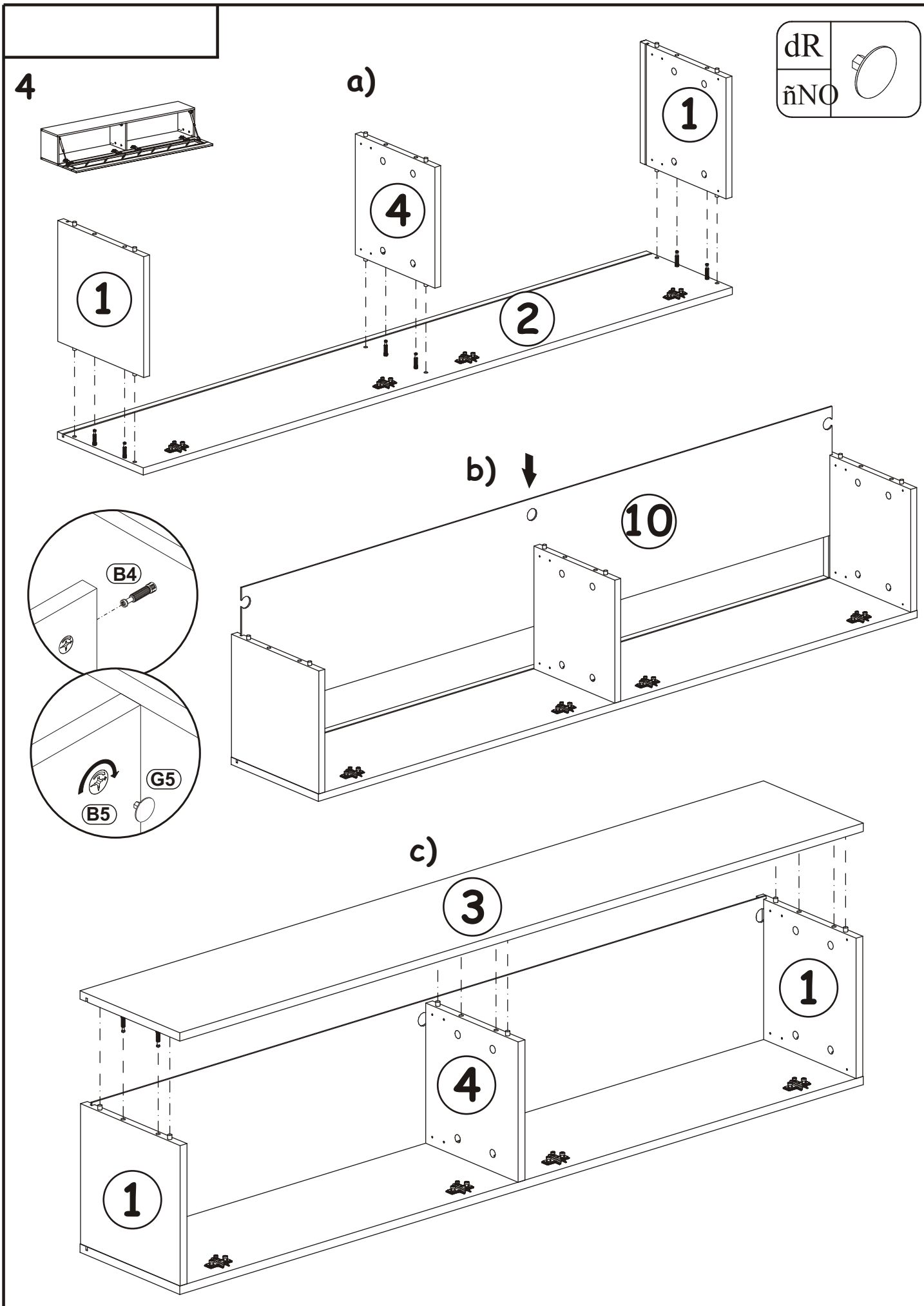
4
a)
1
4
1
2
dR
ñNO
b)
10
B4
G5
B5
c)
3
1
4
1

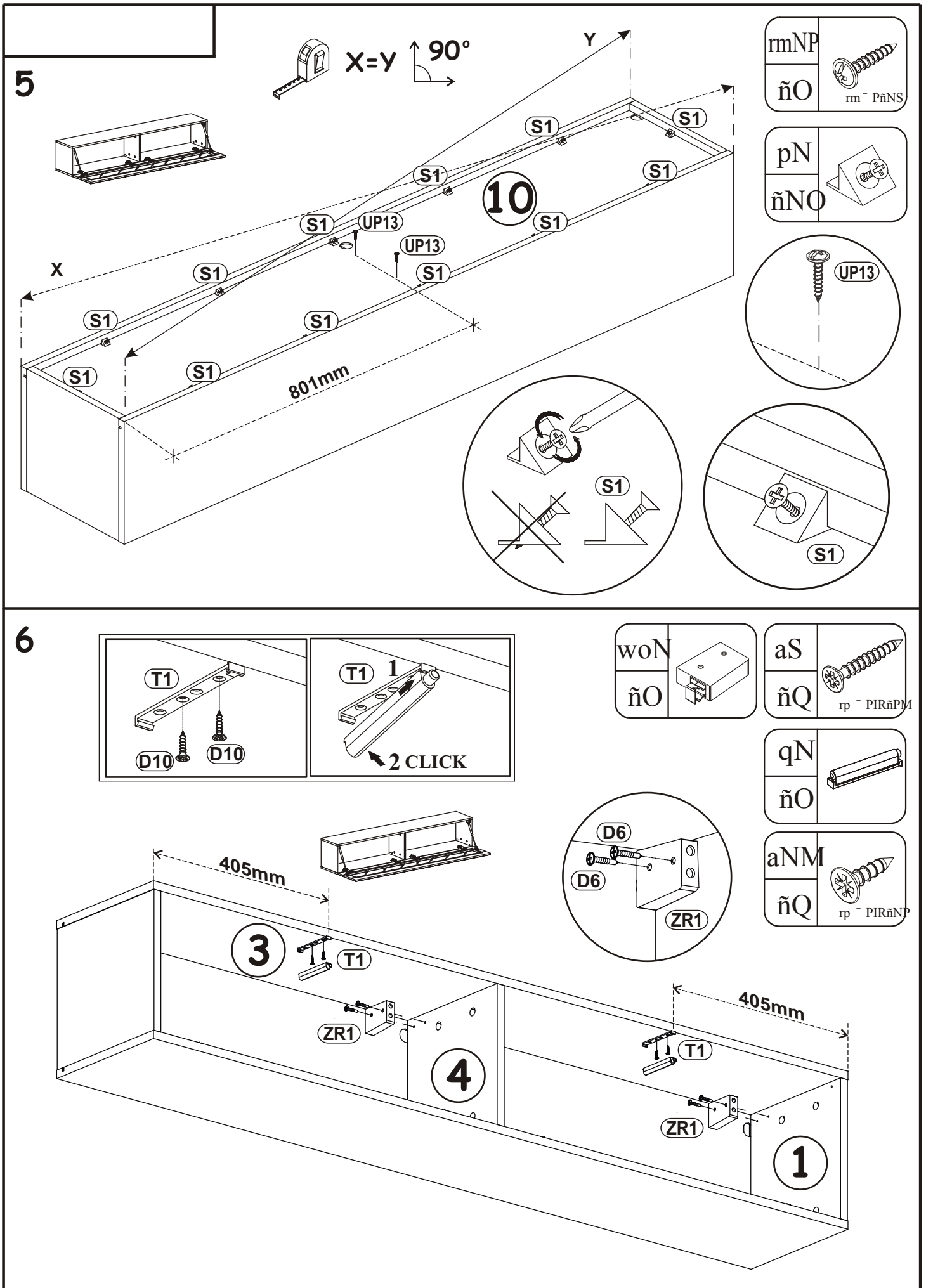
5
X=Y
90°
Y
X
S1
UP13
10
801mm
rmNP
ñO
rm ¯ PñNS
pN
ñNO
UP13
6
T1
D10
D10
T1
1
2 CLICK
woN
ñO
aS
ñQ
rp ¯ PIRñPM
qN
ñO
D6
D6
ZR1
aNM
ñQ
rp ¯ PIRñNP
405mm
3
T1
ZR1
4
405mm
T1
ZR1
1

7

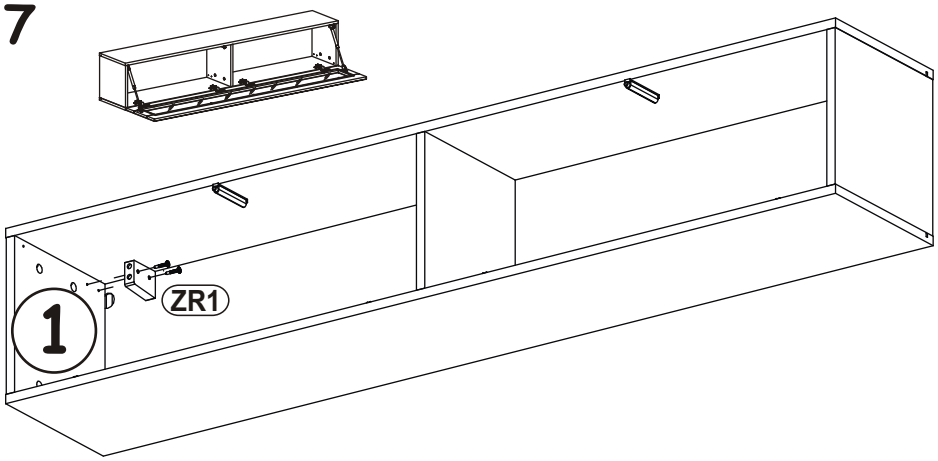
1
ZR1

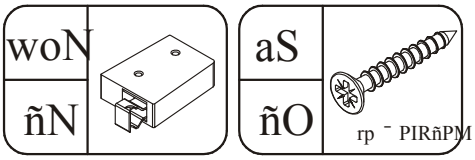
woN
ñN
aS
ñO
rp ¯ PIRñPM

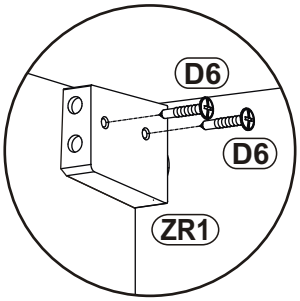
D6
D6
ZR1

8

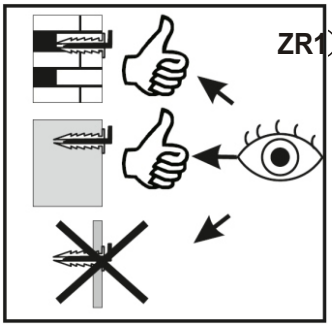
ZR1

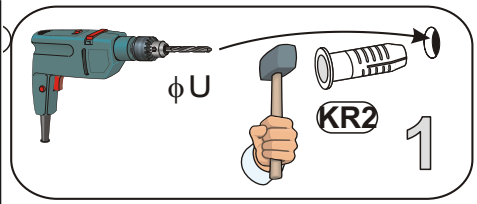
ϕU
KR2
1

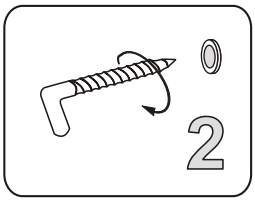
2

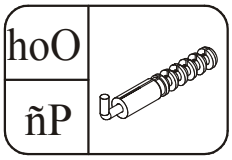
hoO
ñP

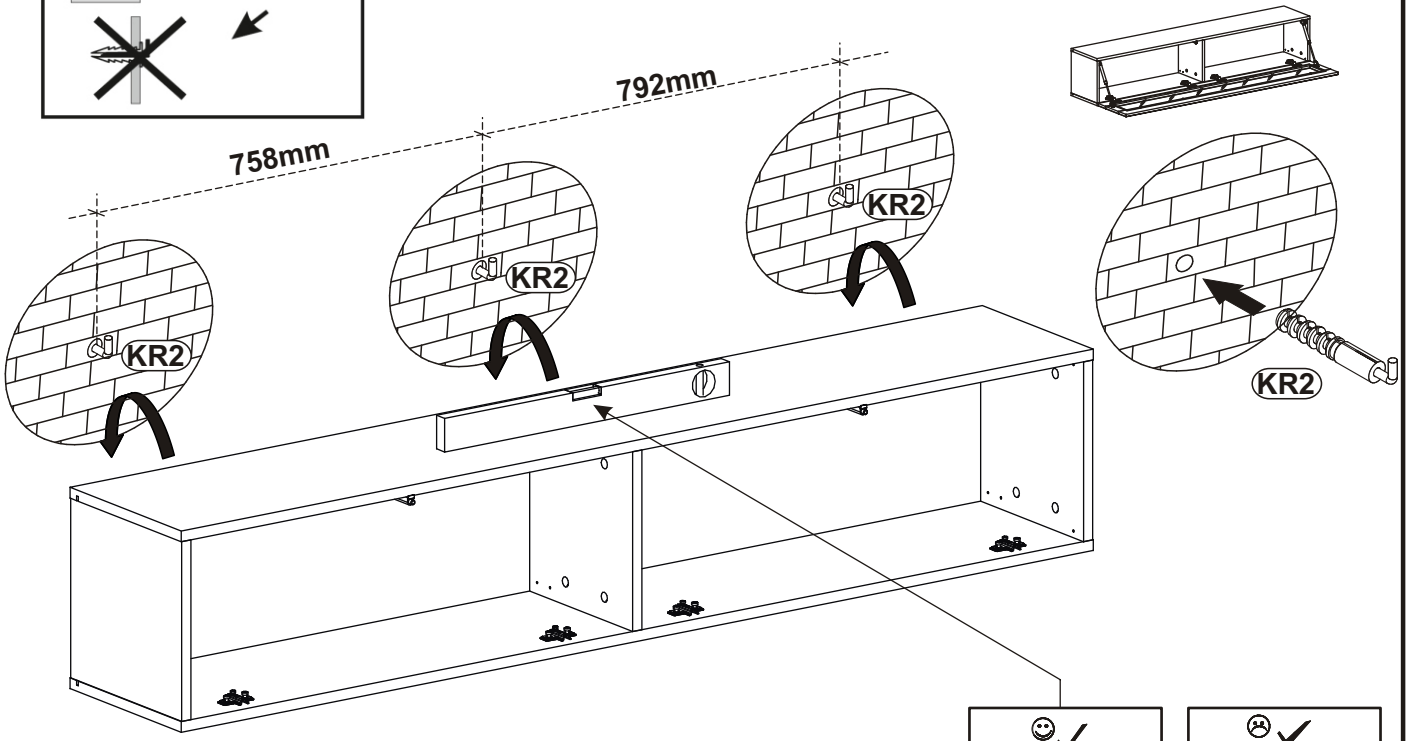
792mm
758mm
KR2
KR2
KR2
KR2

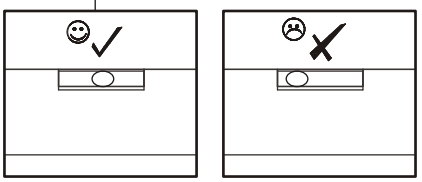

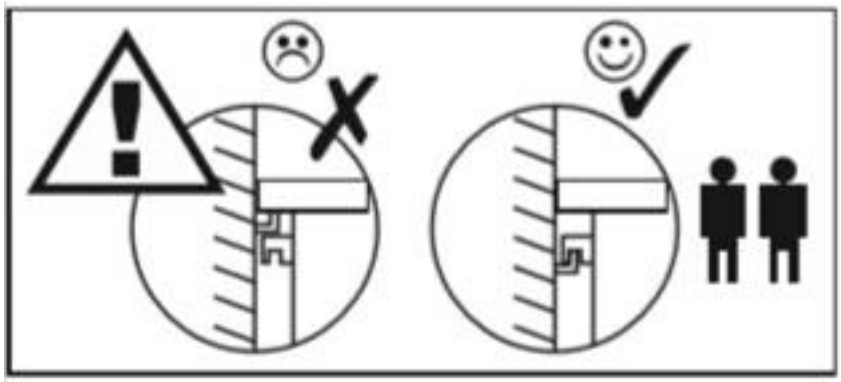

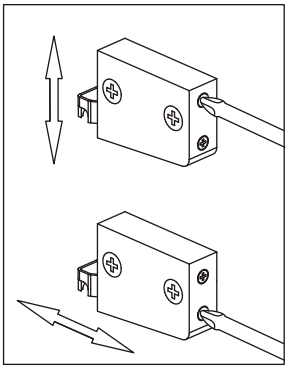

9

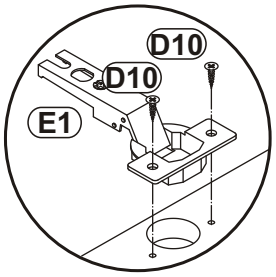
D10
D10
E1

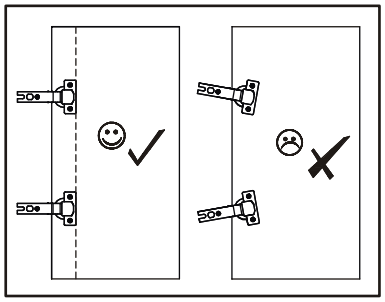

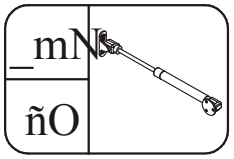
_mN
ñO

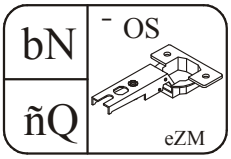
bN
ñQ
¯ OS
eZM

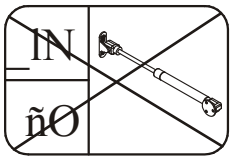
_lN
ñO

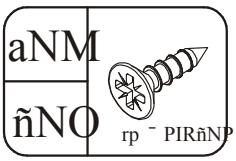
aNM
ñNO
rp ¯ PIRñNP

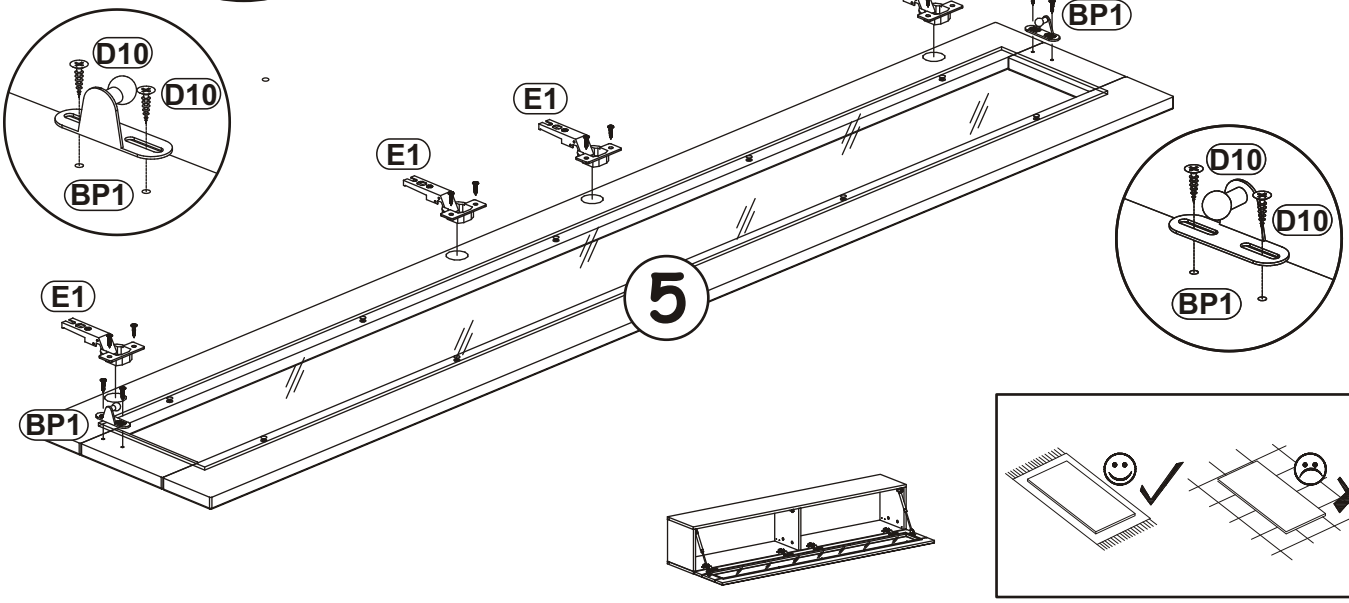
E1
BP1
E1
E1
5
E1
BP1

D10
D10
BP1

D10
D10
BP1

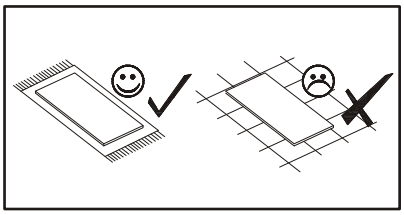

10

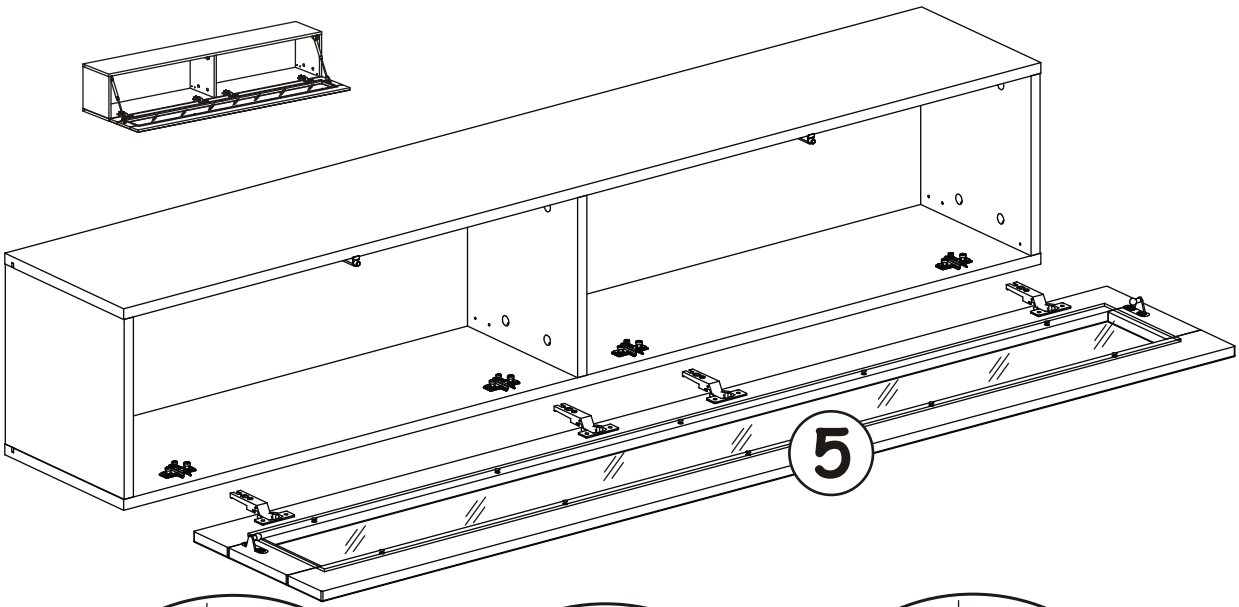
5

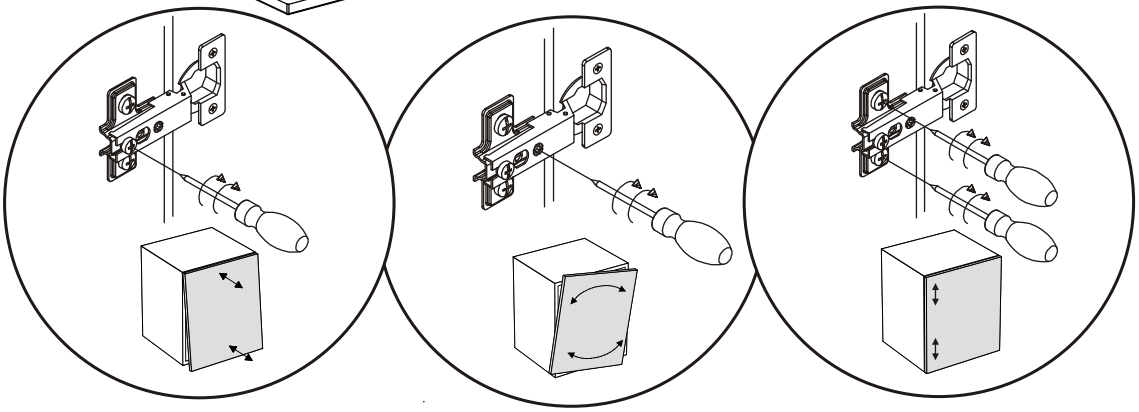

11

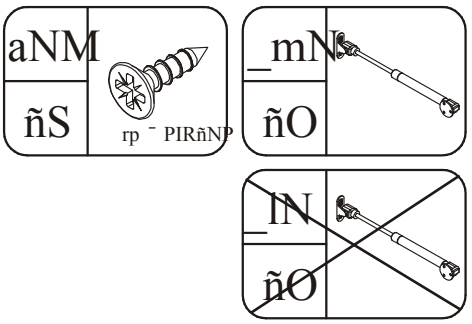
aNM
ñS
rp ¯ PIRñNP
_mN
ñO
_lN
ñO

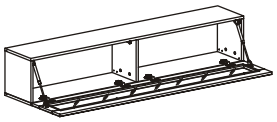

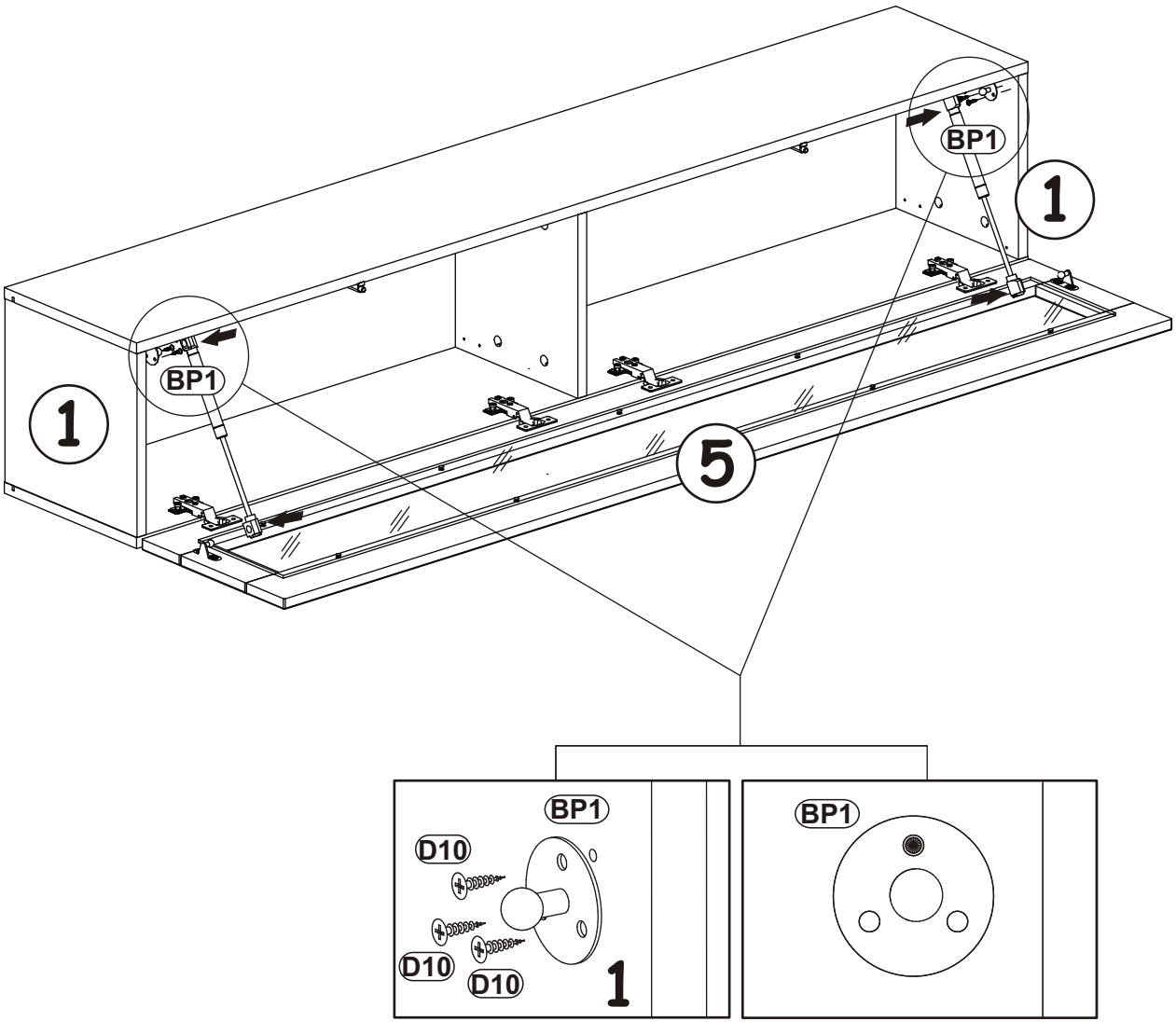
BP1
1
BP1
1
5
BP1
D10
D10
D10
1
BP1

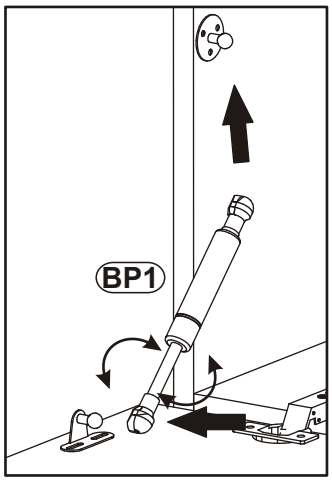
BP1

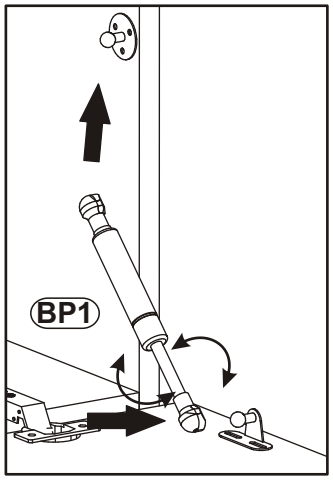
BP1

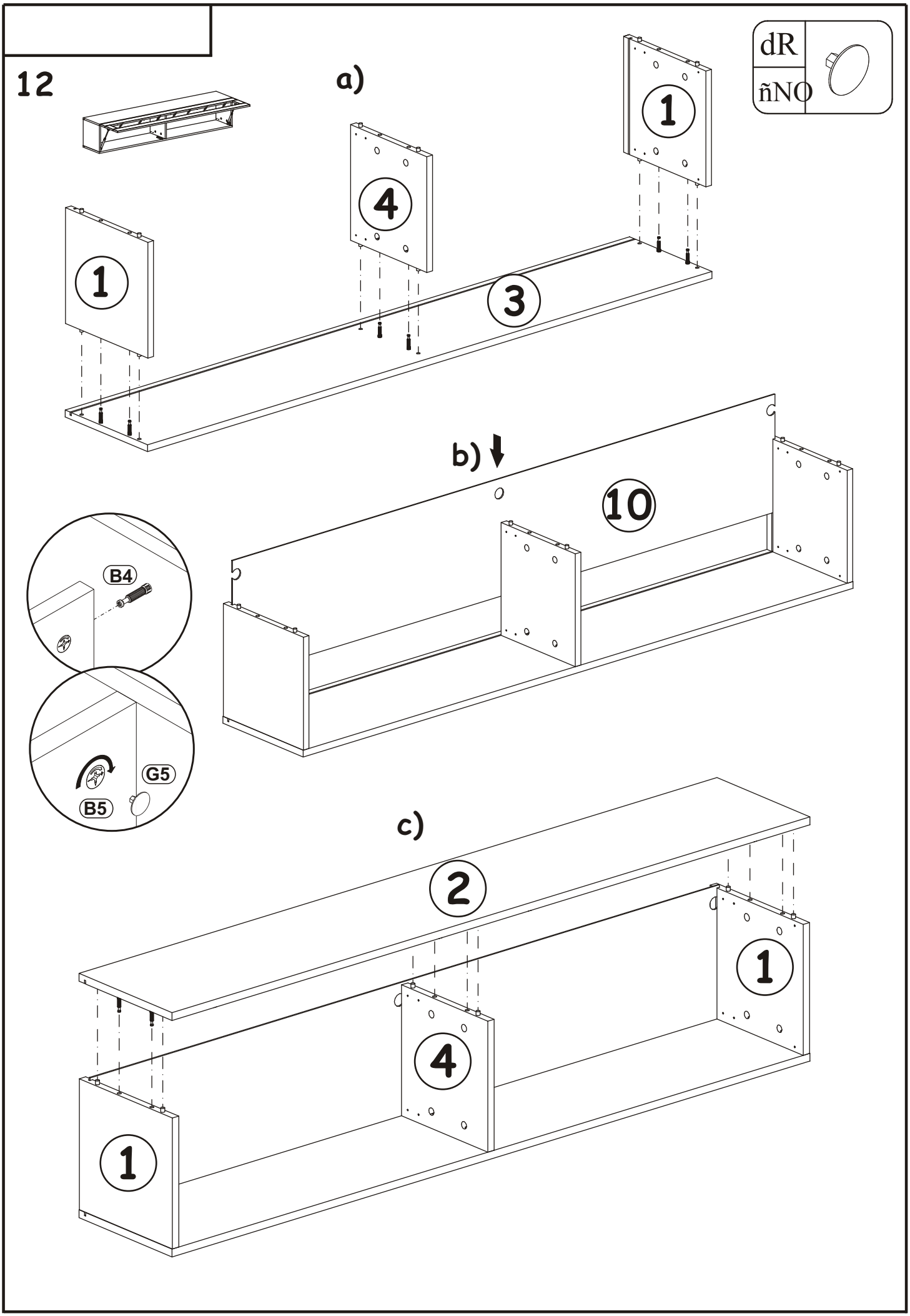
12
a)
dR
ñNO
1
4
1
3
b)
10
B4
G5
B5
c)
2
1
4
1

13

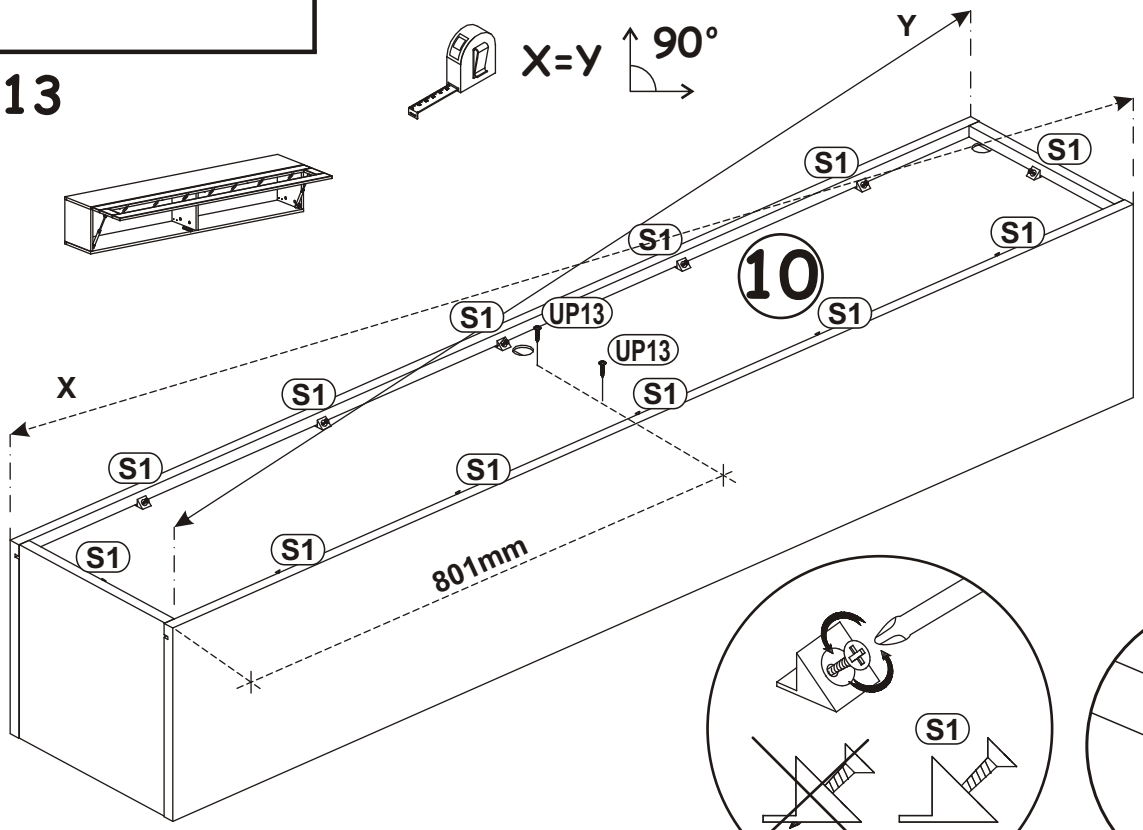
X=Y
90°
Y
X
S1
UP13
10
801mm

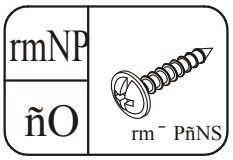
rmNP
ñO
rm ¯ PñNS

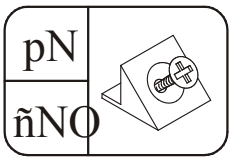
pN
ñNO

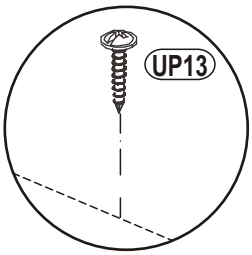
UP13

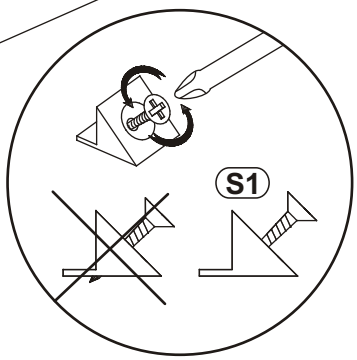
S1

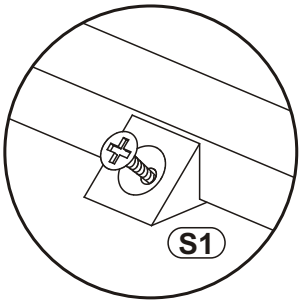
S1

14

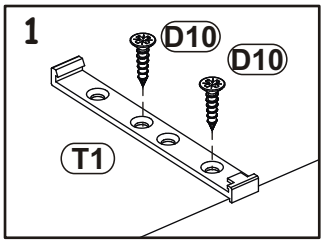
1
D10
D10
T1

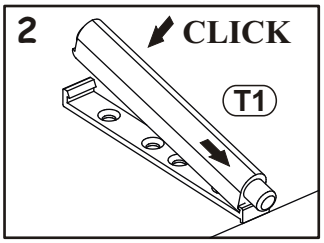
2
CLICK
T1

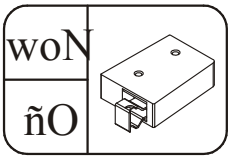
woN
ñO

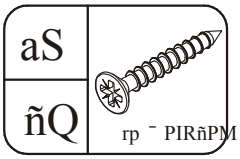
aS
ñQ
rp ¯ PIRñPM

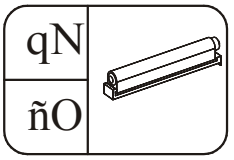
qN
ñO

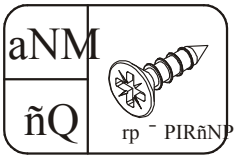
aNM
ñQ
rp ¯ PIRñNP

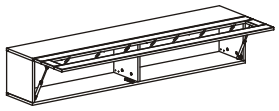

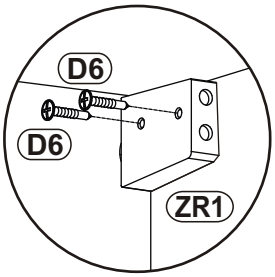
D6
D6
ZR1

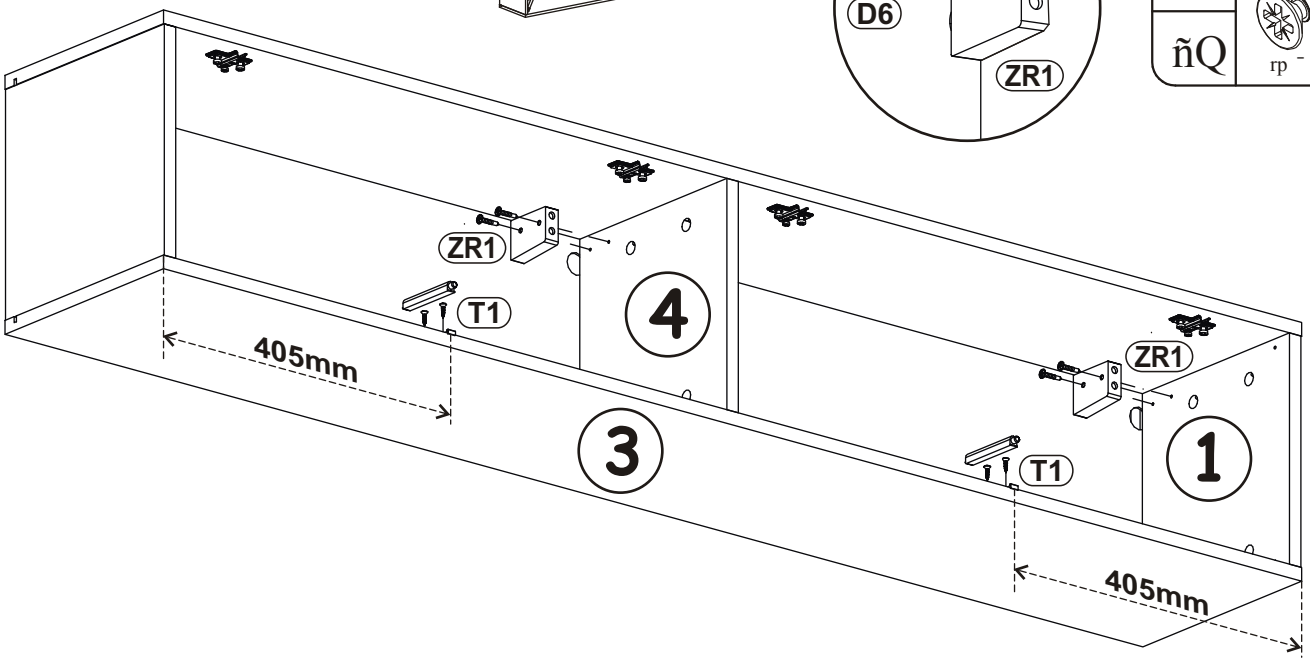
ZR1
T1
4
405mm
3
ZR1
T1
1
405mm

15

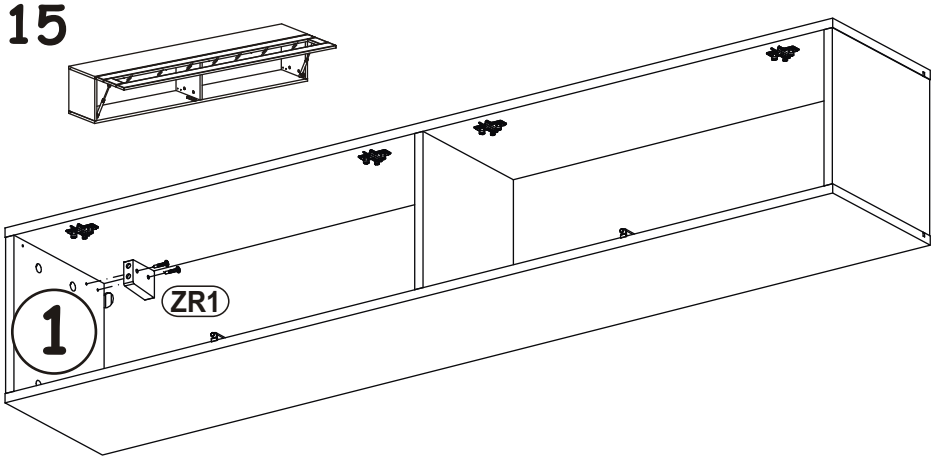
ZR1
1

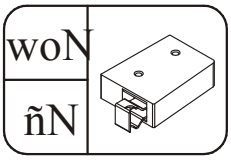
woN
ñN

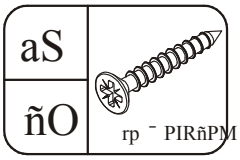
aS
ñO

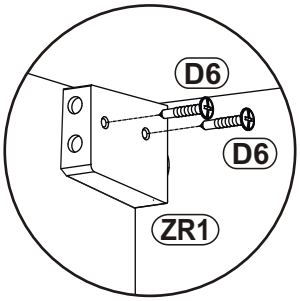
D6
D6
ZR1

16

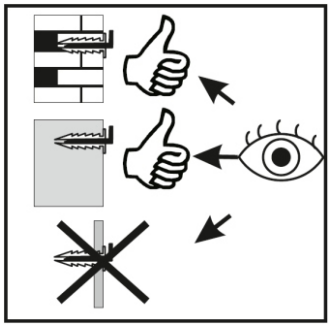

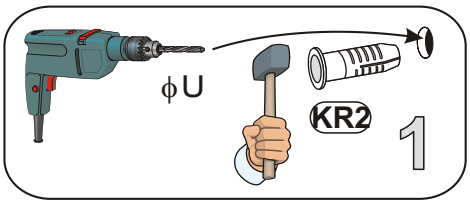
ϕU
KR2
1

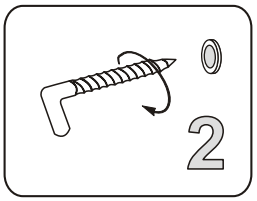
2

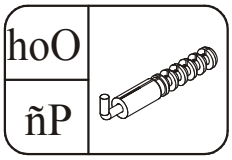
hoO
ñP

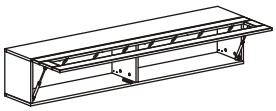

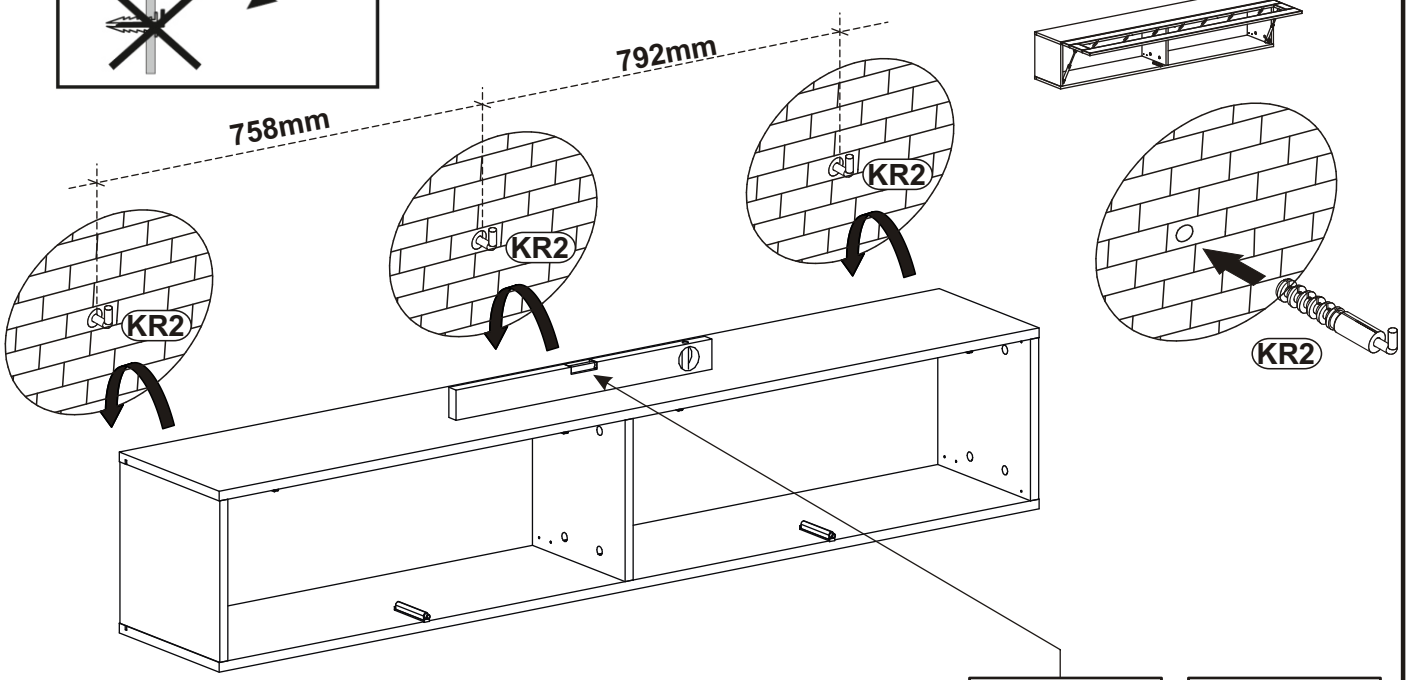
792mm
758mm
KR2
KR2
KR2
KR2

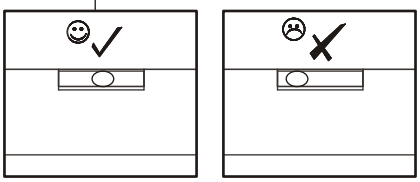

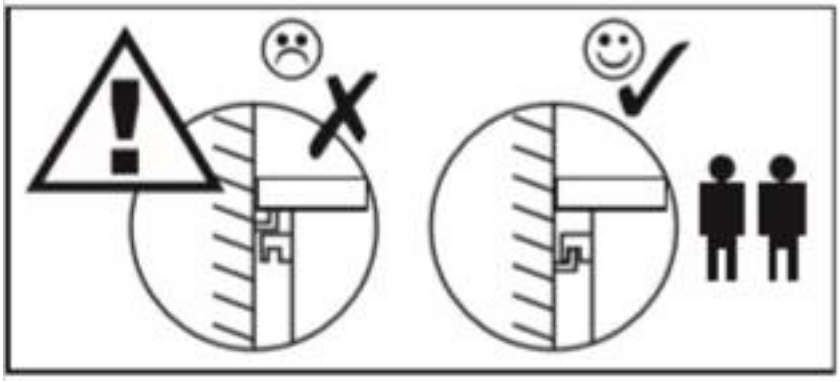

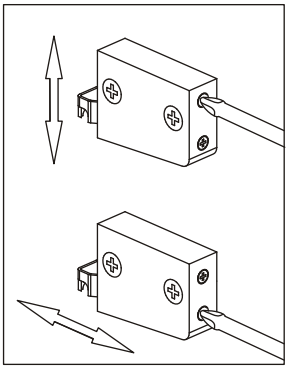

17

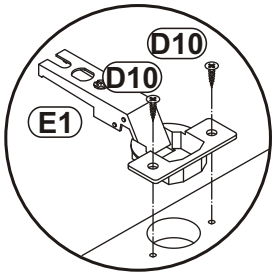
D10
D10
E1

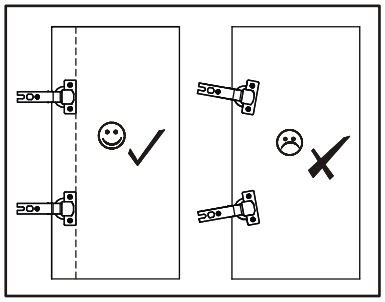

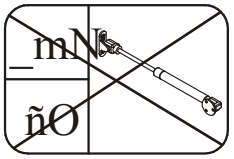
_mN
ñO

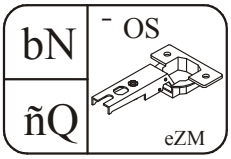
bN
¯ OS
ñQ
eZM

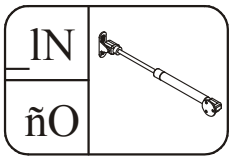
_lN
ñO

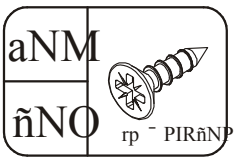
aNM
ñNO
rp ¯ PIRñNP

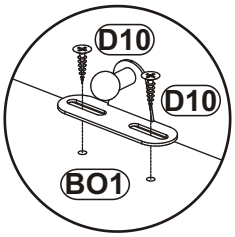
D10
D10
BO1

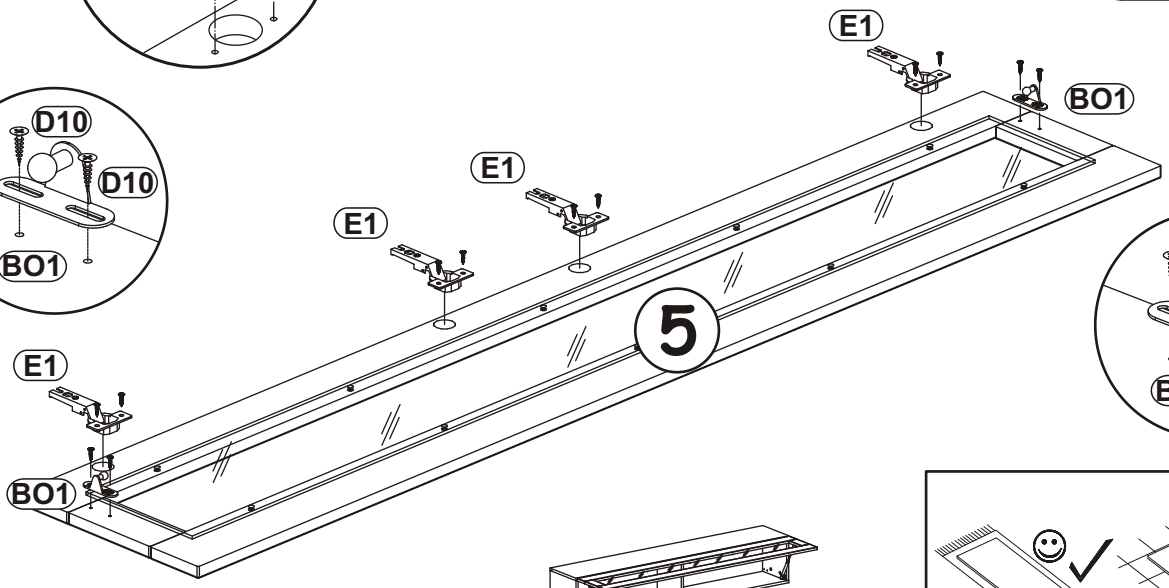
E1
E1
E1
E1
BO1
BO1
5

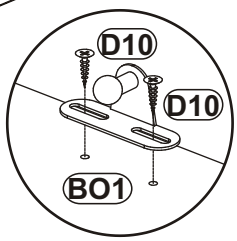
D10
D10
BO1

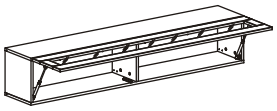

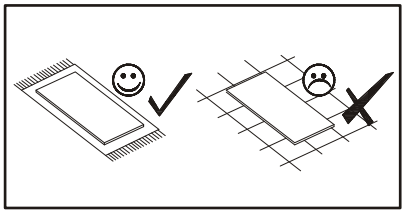

18

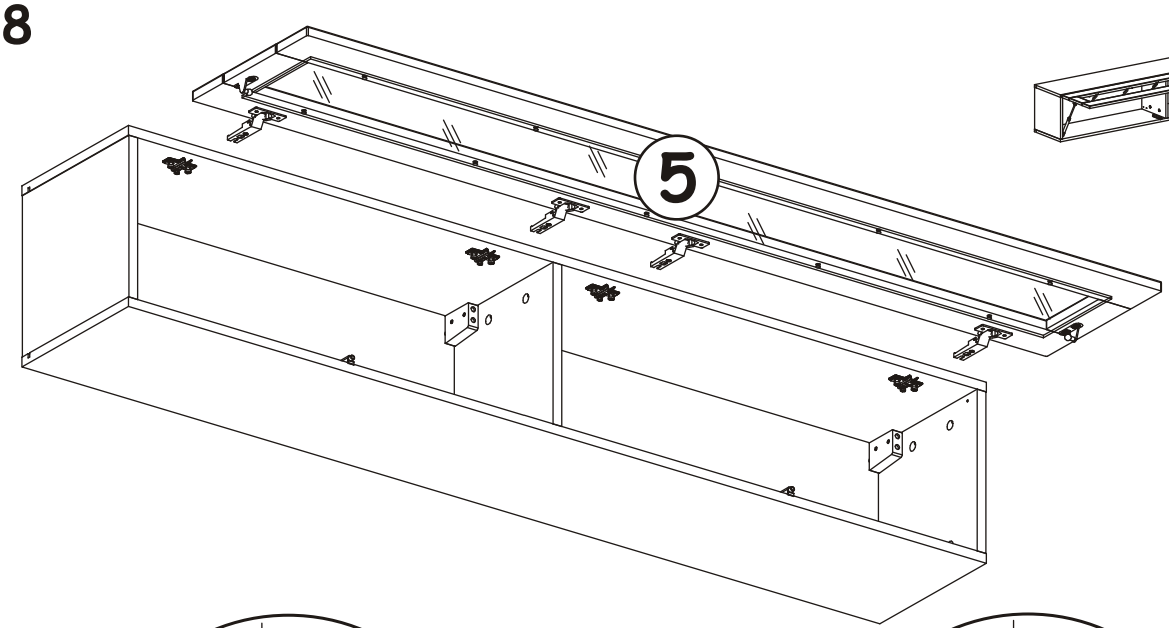
5

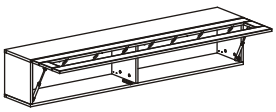

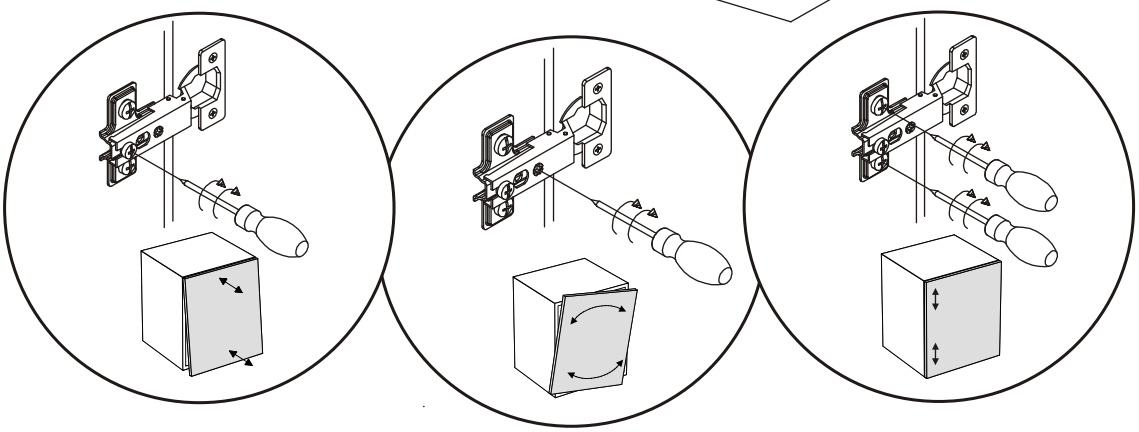

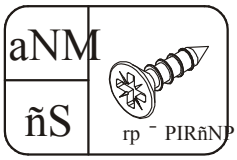
aNM
ñS
rp ¯ PIRñNP

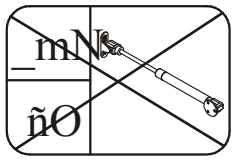
_mN
ñO

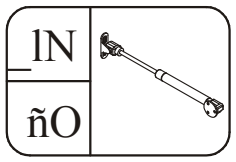
_lN
ñO

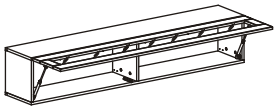

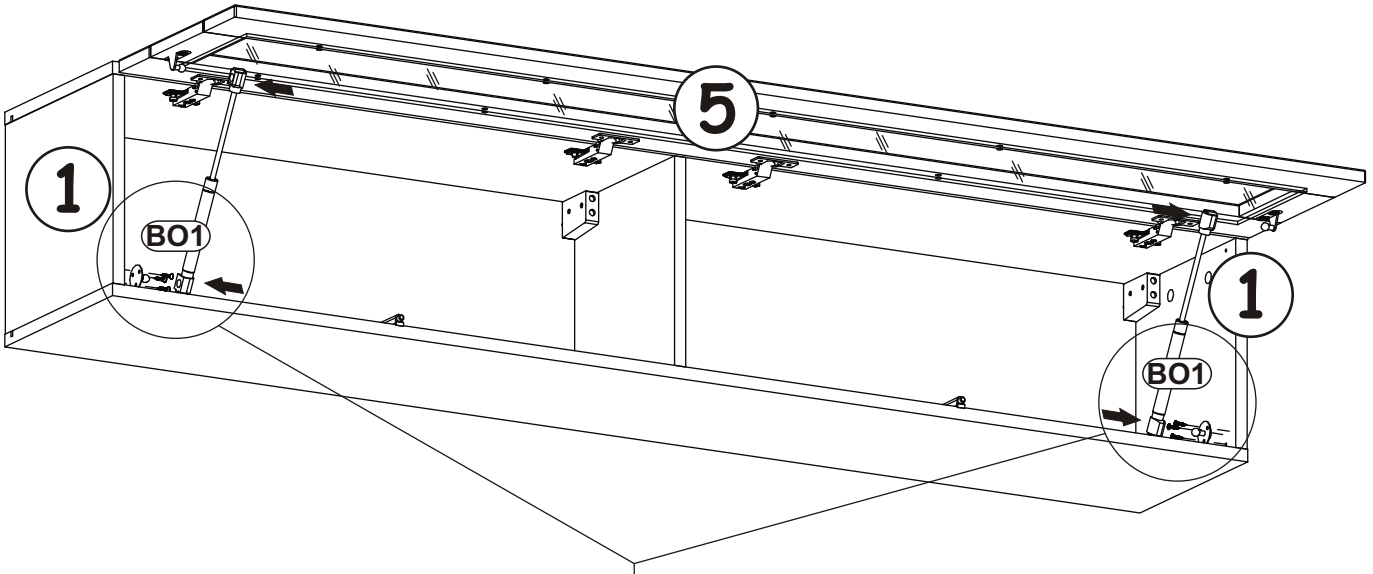
5
1
BO1
1
BO1

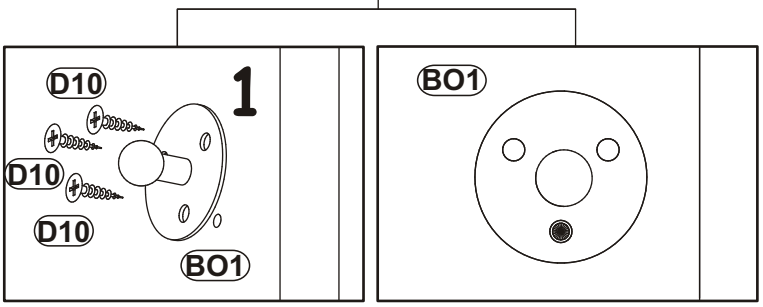
D10
1
D10
D10
BO1
BO1

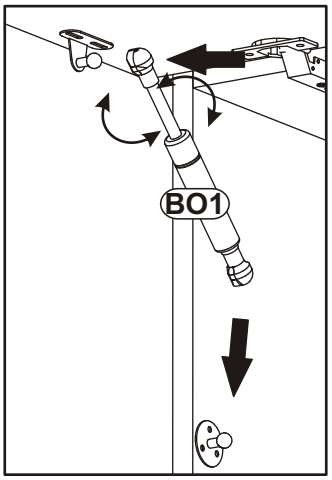
BO1

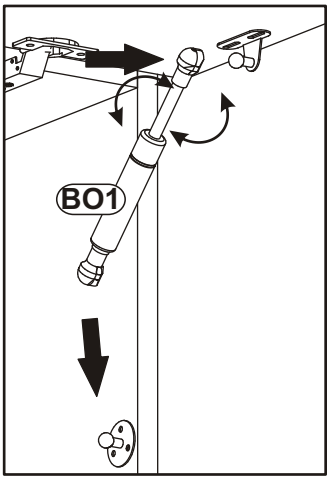
BO1

TVAM045 FLY 28 -- FY SBK

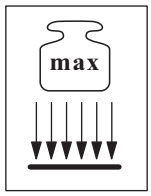

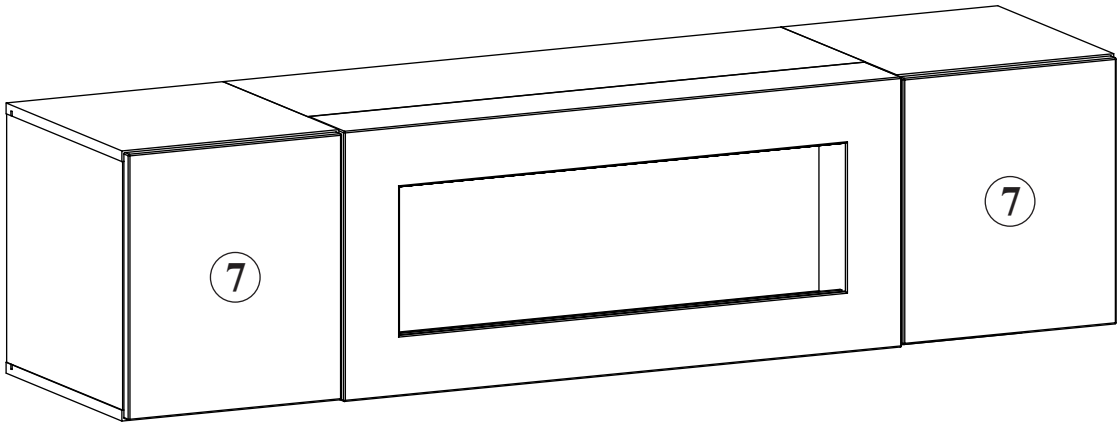

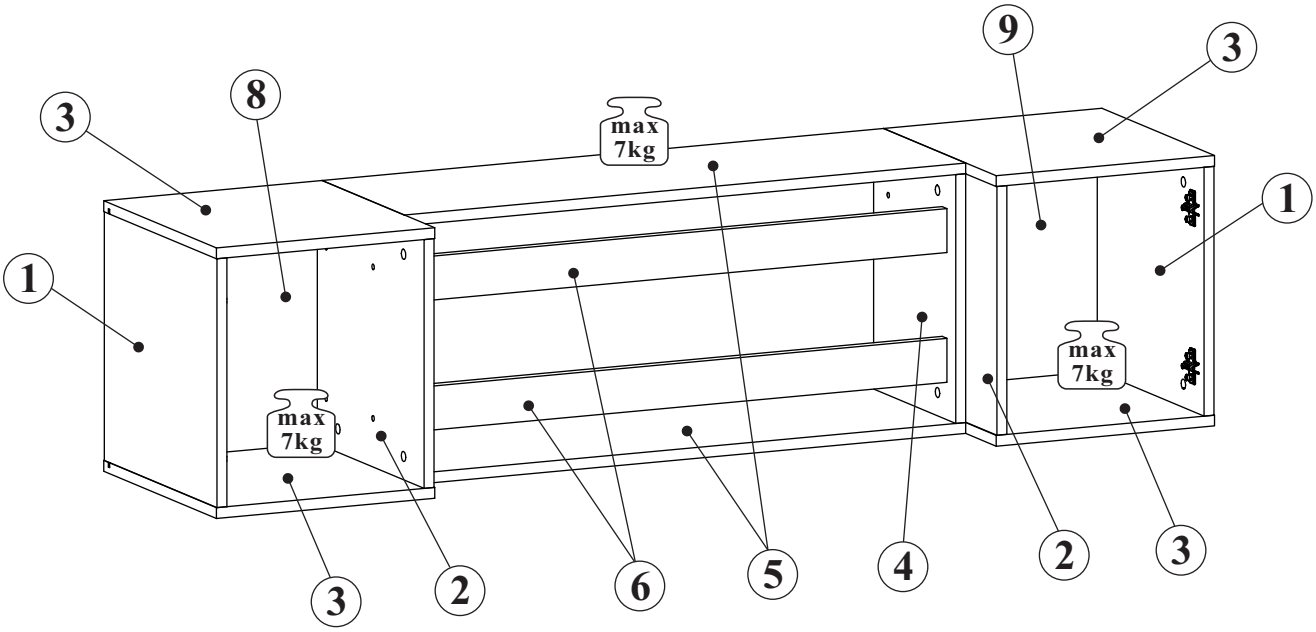

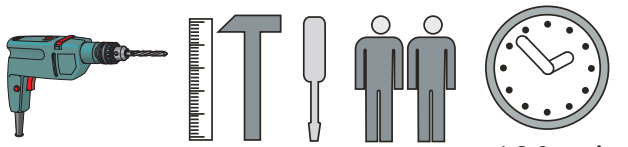

120 min

NO	Dim.		Col.-No	Qty
1	368	384	1	2
2	368	384	1	2
3	350	384	1	4
4	368	280	1	2
5	900	280	1	2
6	868	65	1	2
7	344	394	1	2
8	380	328	1	1
9	380	328	1	1

FLY 28 -- FY SBK

A1 x28 Ø8x36	B5 x28 Ø15x12	B4 x28	G5 x28	ZR1 x4	D6 x8 USØ3,5x30
E1 x4 Ø26 H=0	E2 x4 H=0	D10 x12 USØ3,5x13	OD1 x2	B81 x8 M6x26-35 Ø8	S1 x8
PI x1	UP13 x2 UPØ3x16	UP6 x2 UPØ4x30	KR2 x4	G2 x1	

0 mm 10 20 30 40 50 60

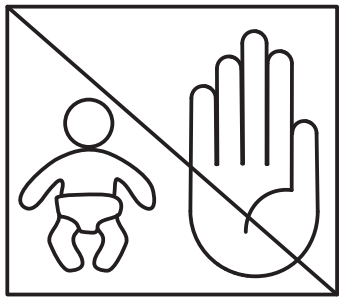

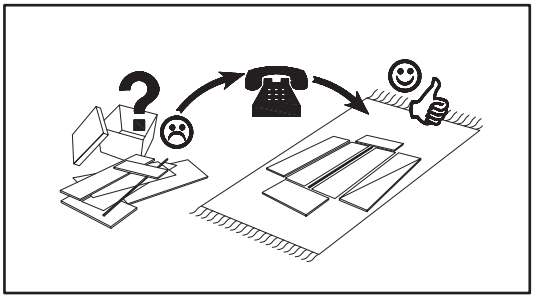

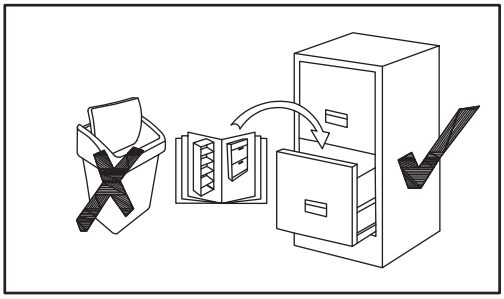

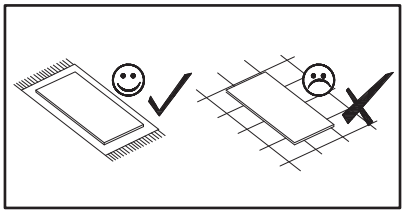

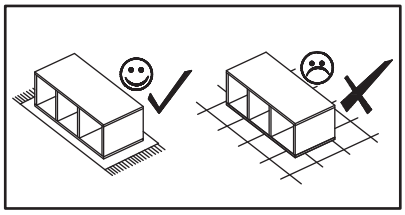

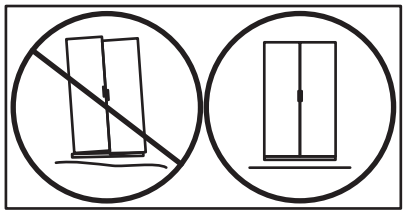

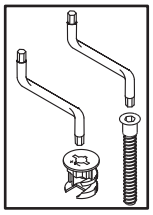

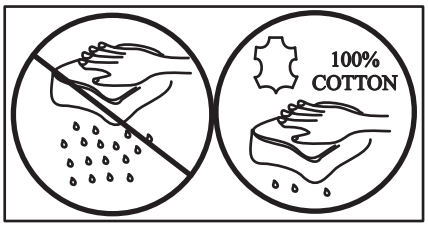

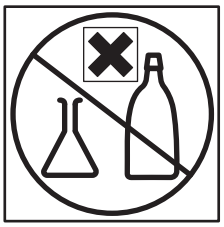

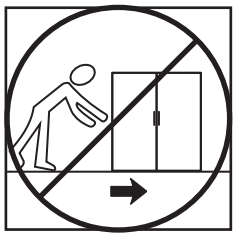

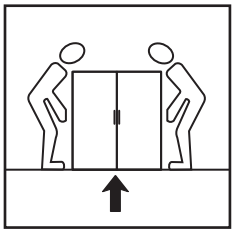

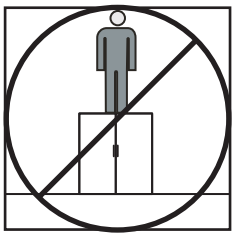

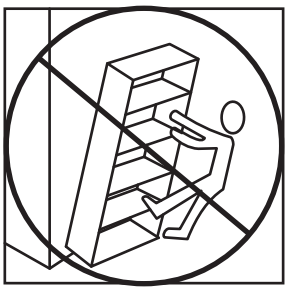

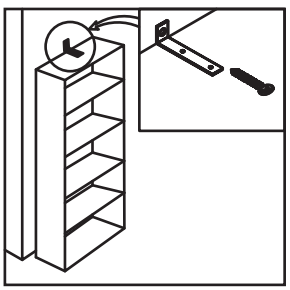

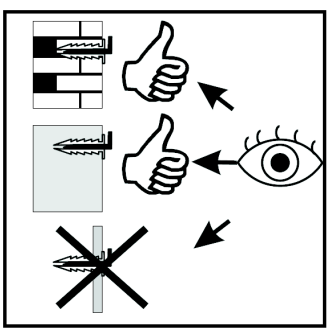

FLY 28 -- FY SBK

A1	B5	E2
x16	x16	x4
Ø8x36	Ø15x12	H=0

1

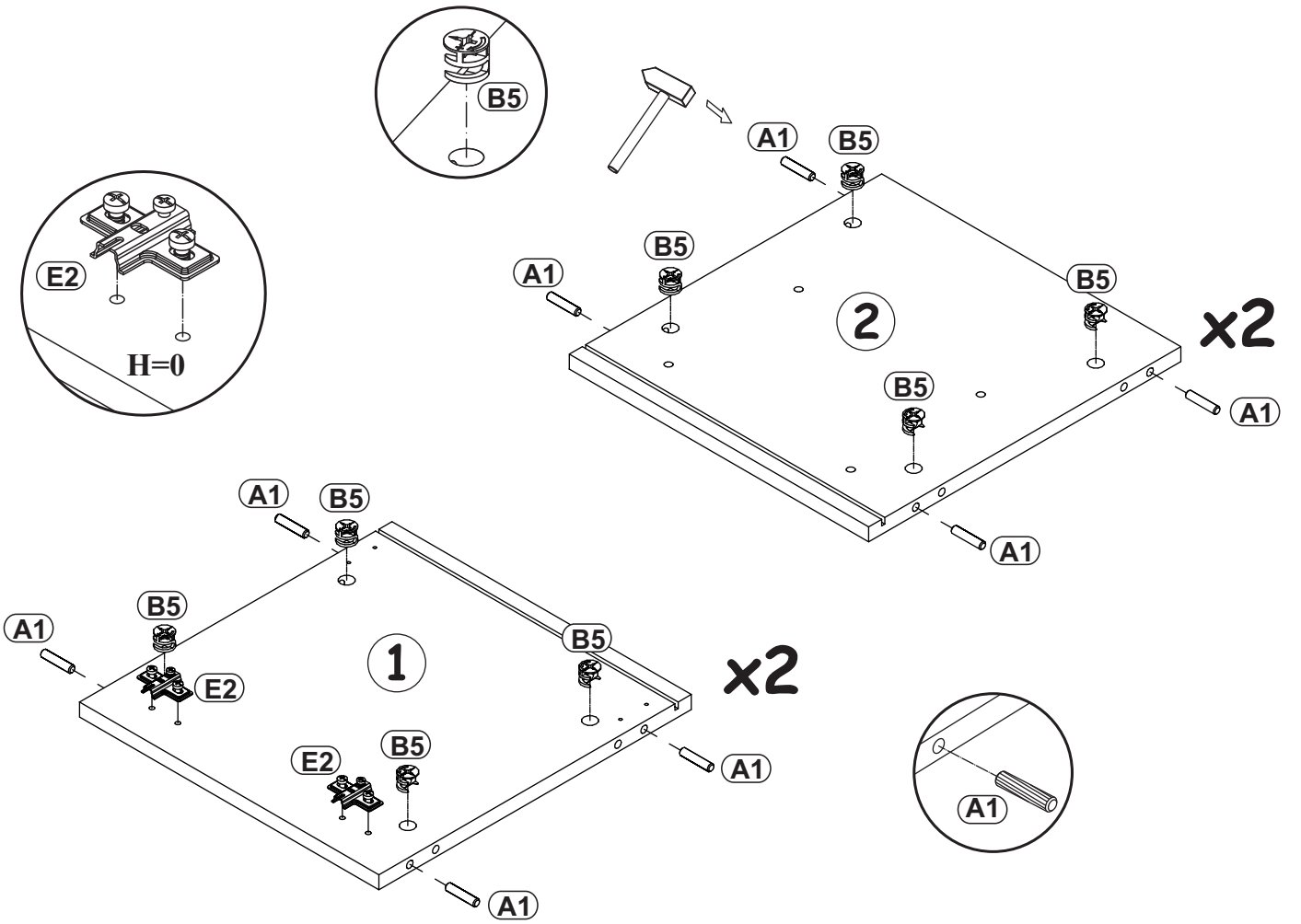

2

A1	B5	B4
x8	x8	x4
Ø8x36	Ø15x12	

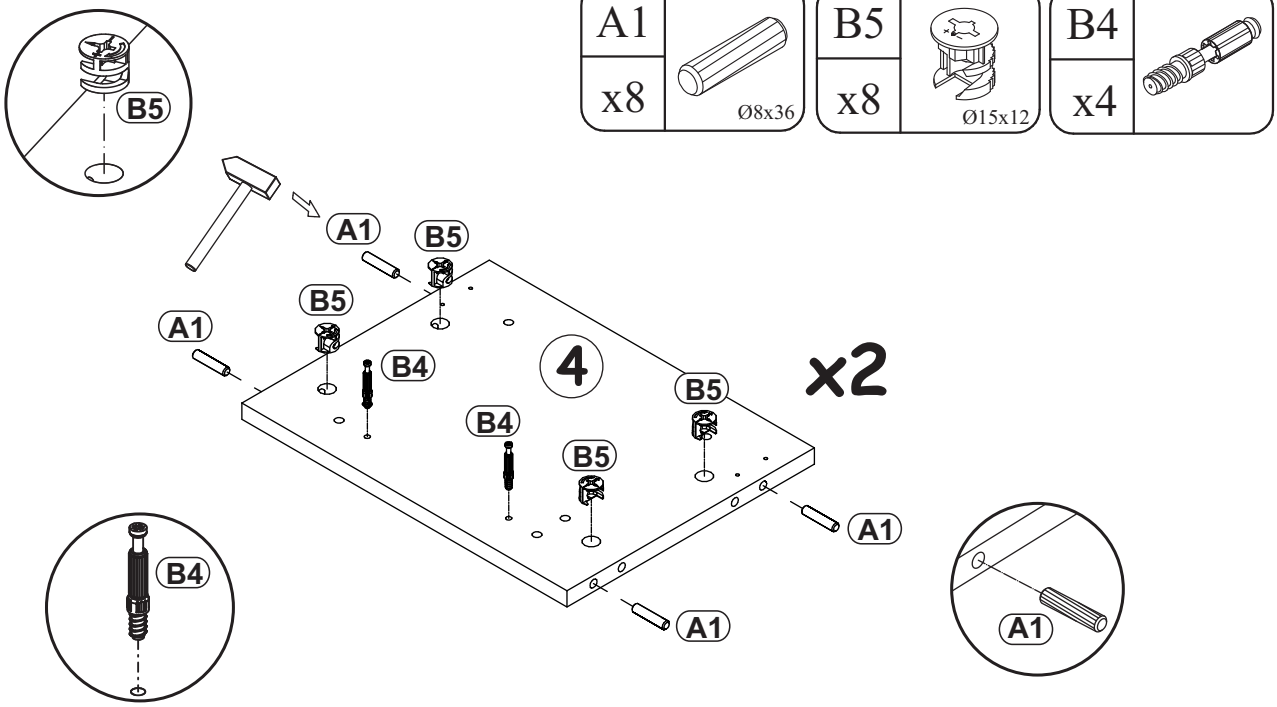

FLY 28 -- FY SBK

3

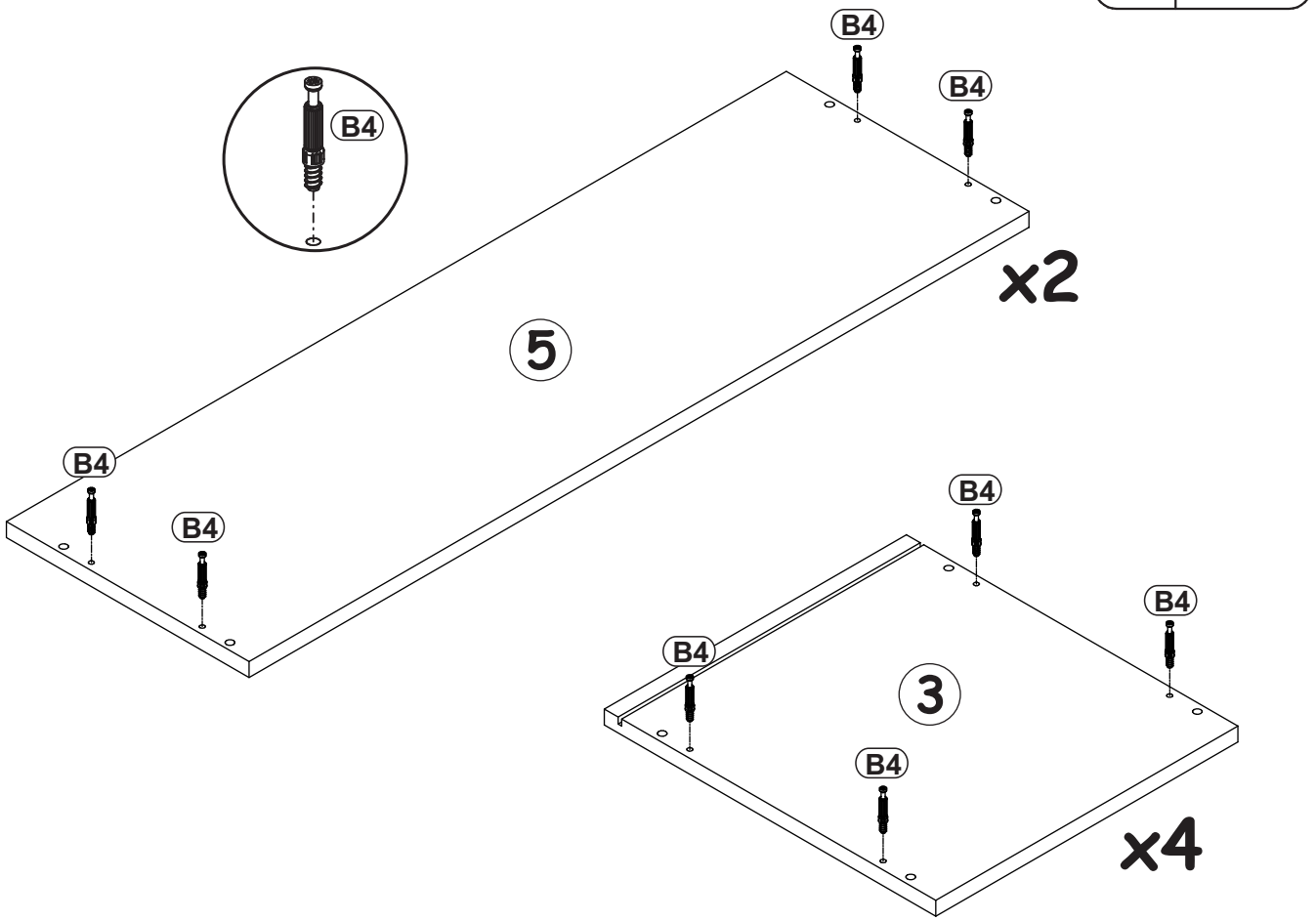

4

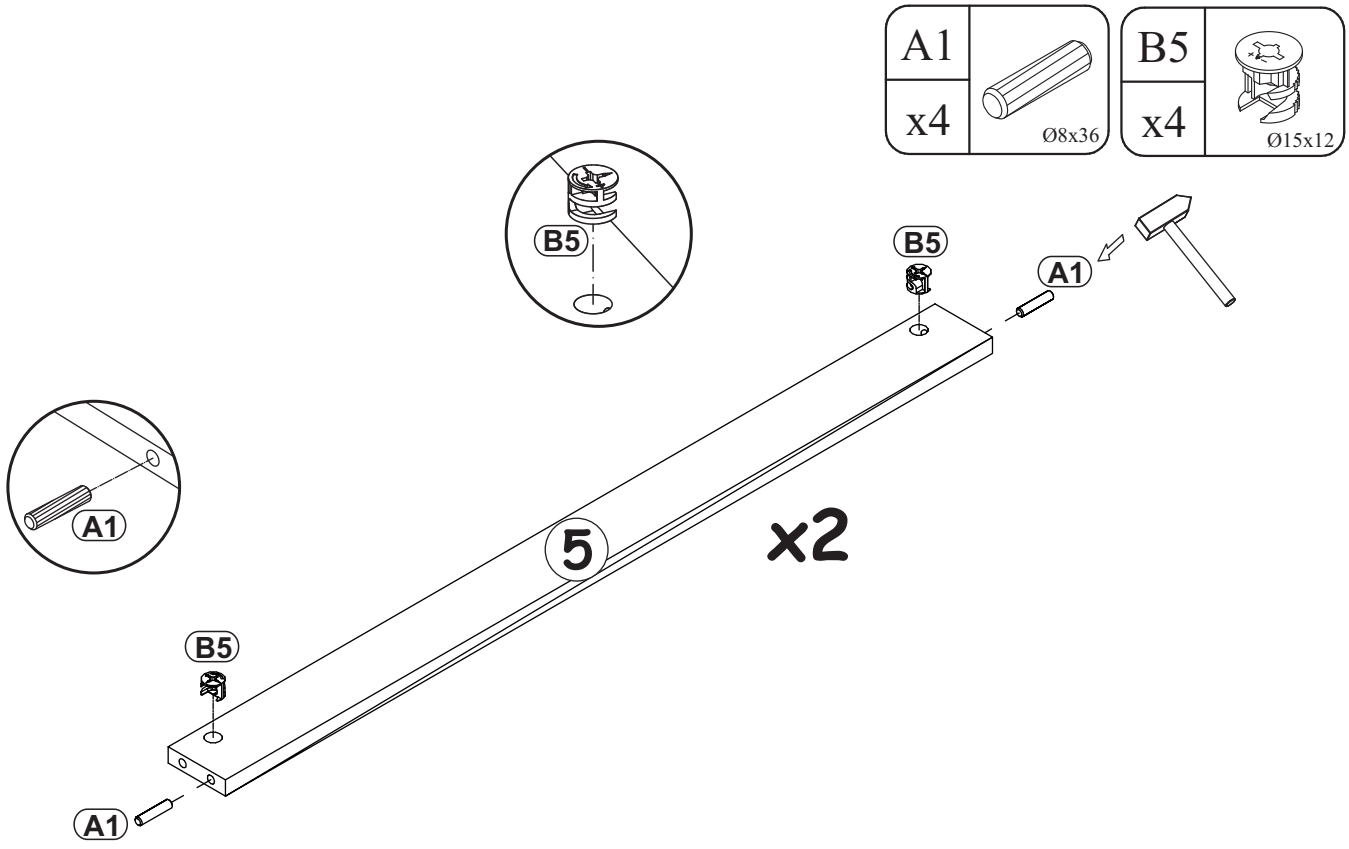

FLY 28 -- FY SBK

E1	Ø26
x4	H=0

D10	USØ3,5x13
x8	

5

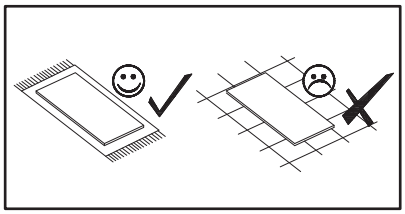

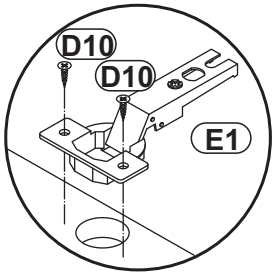

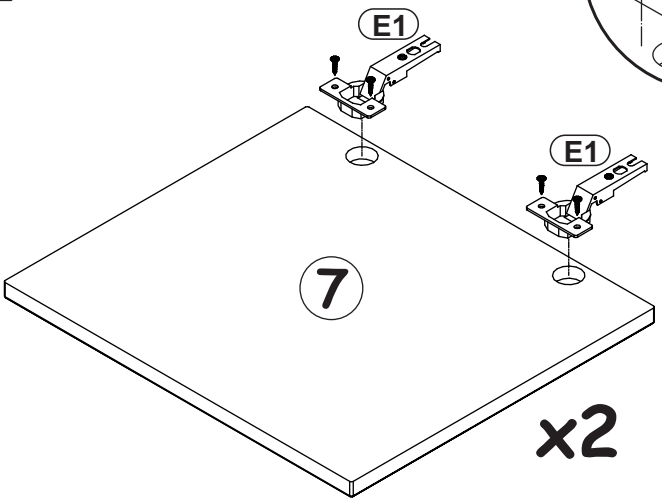

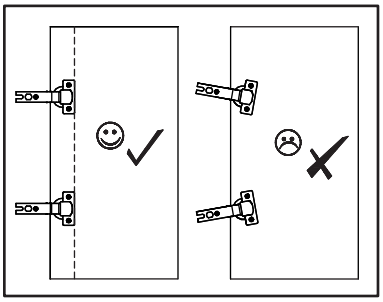

6

G5	
x4	

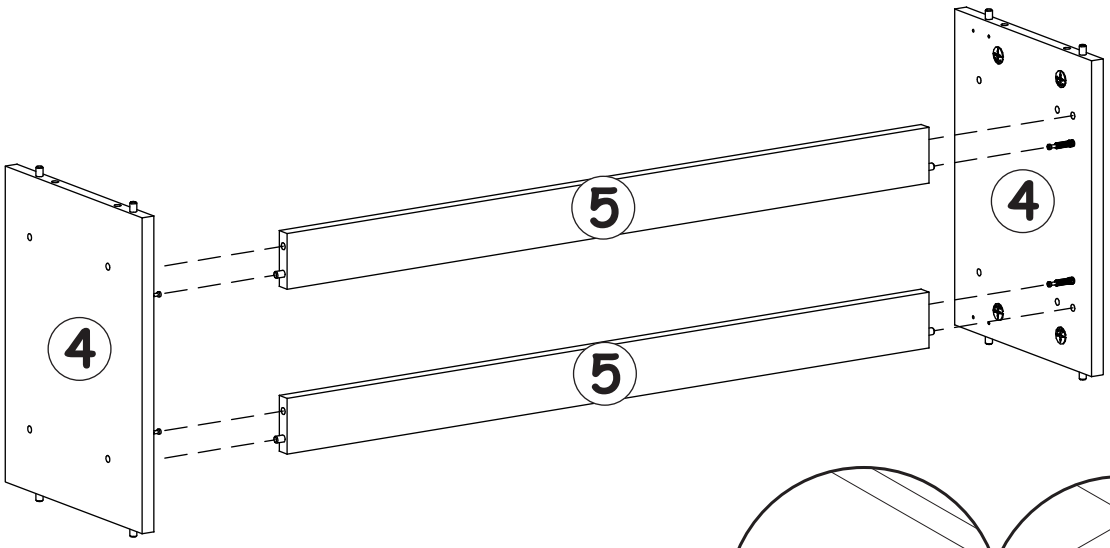

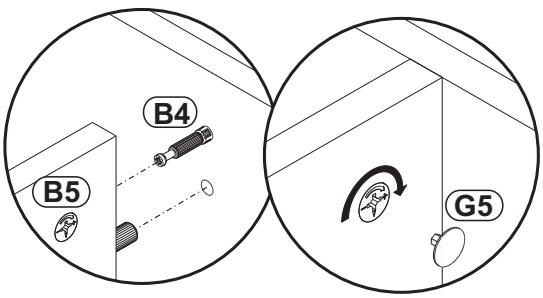

7

G5	
x4	

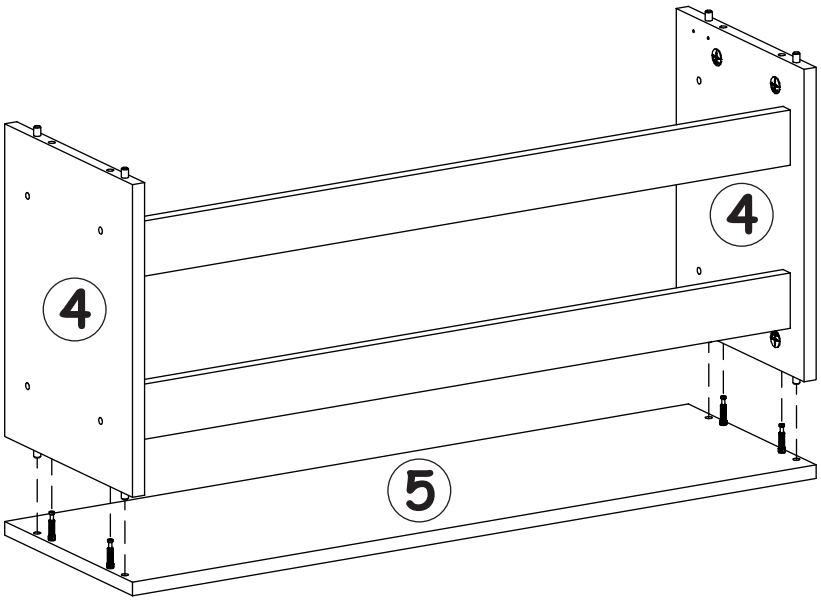

8

G5		UP6	
x4		x2	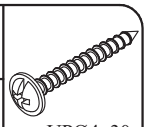 UPØ4x30

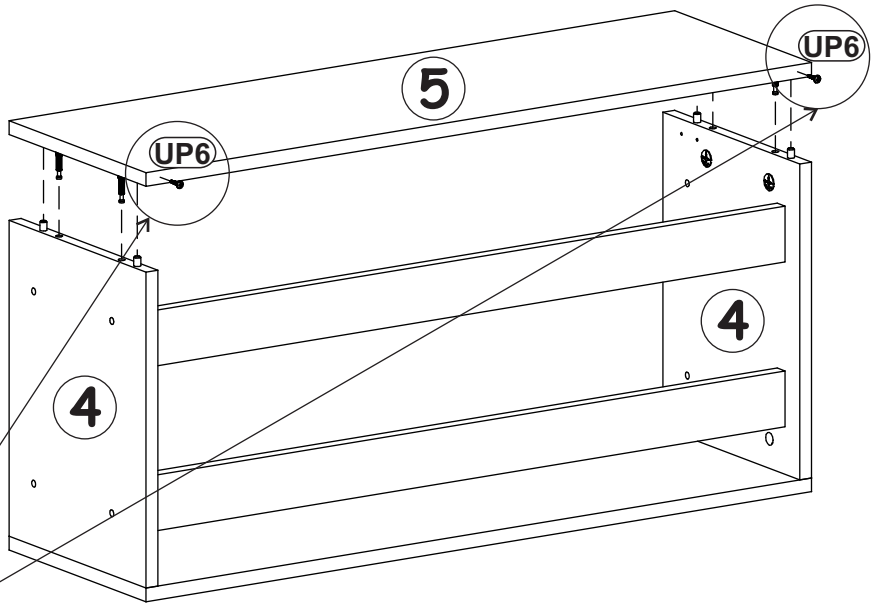

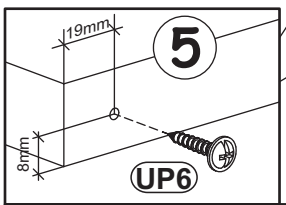

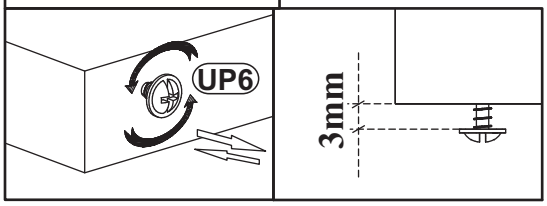

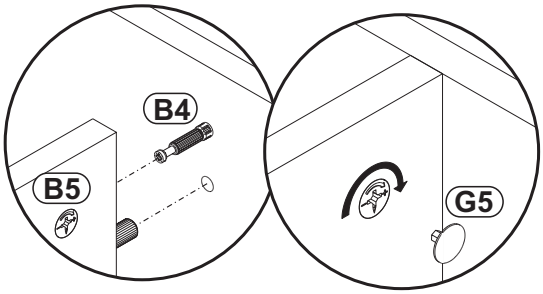

FLY 28 -- FY SBK

9

G5 x8

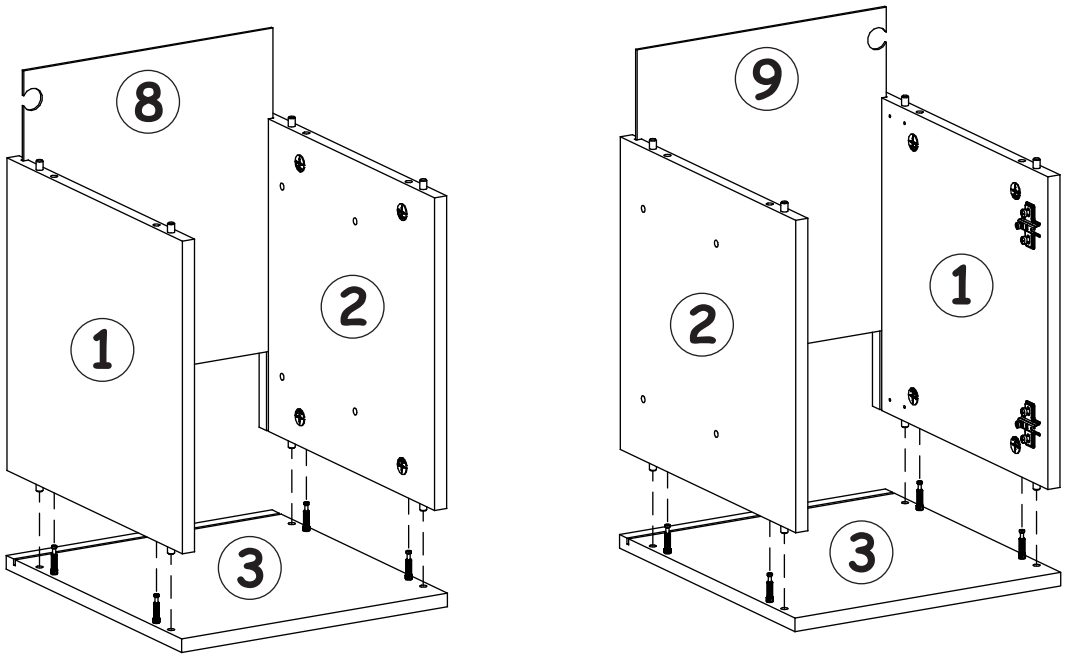

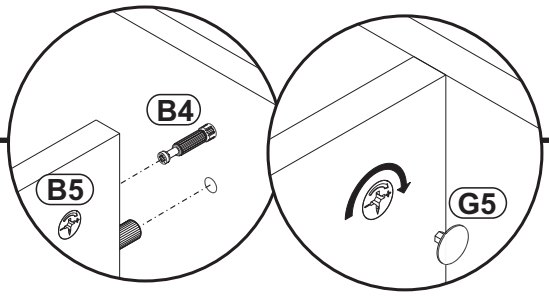

10

G5 x8

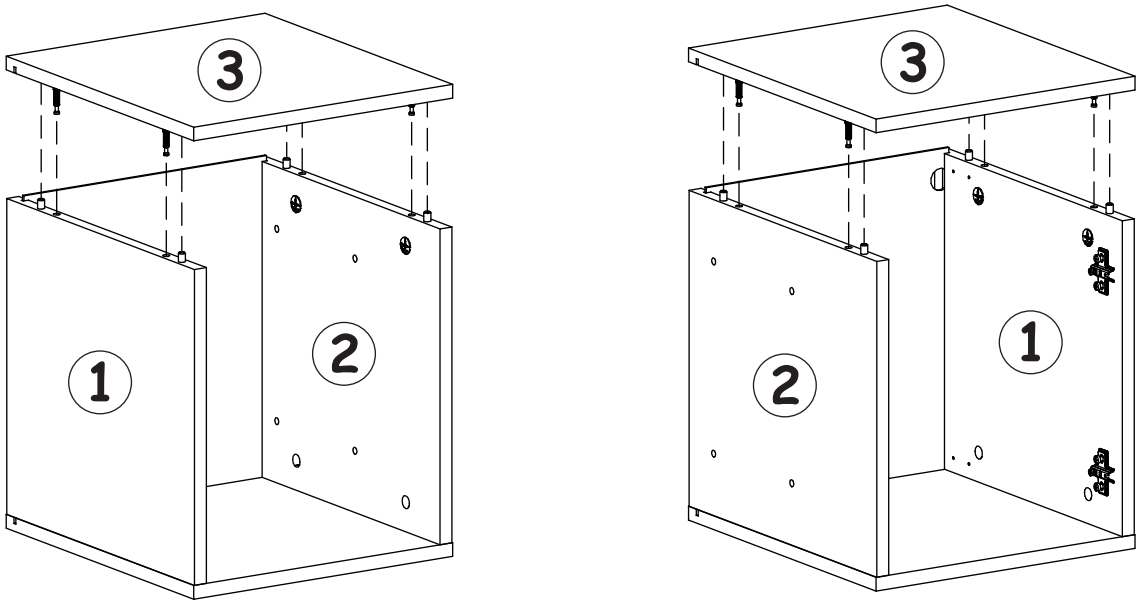

FLY 28 -- FY SBK

11

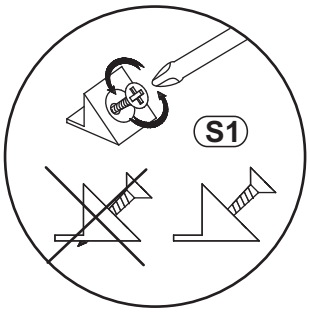

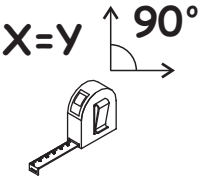

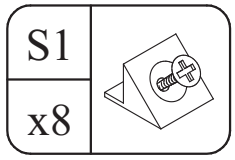

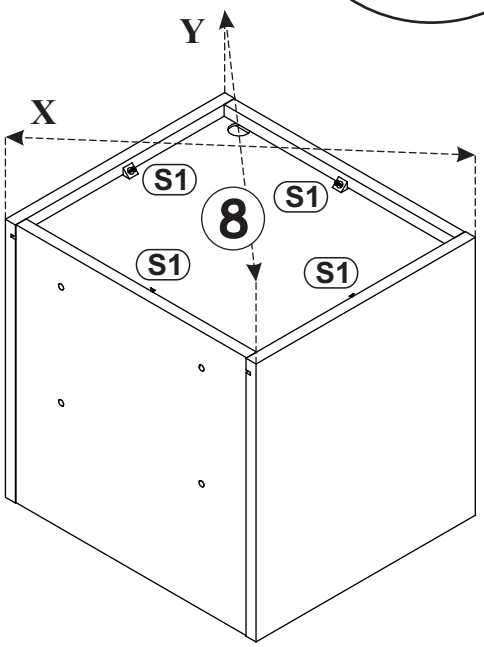

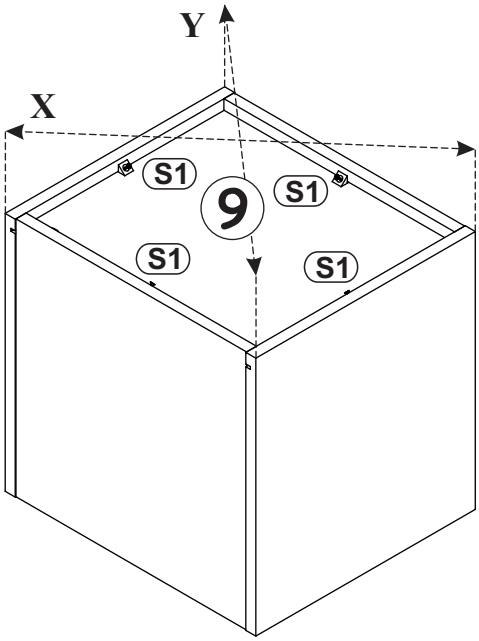

12

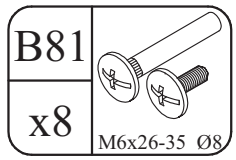

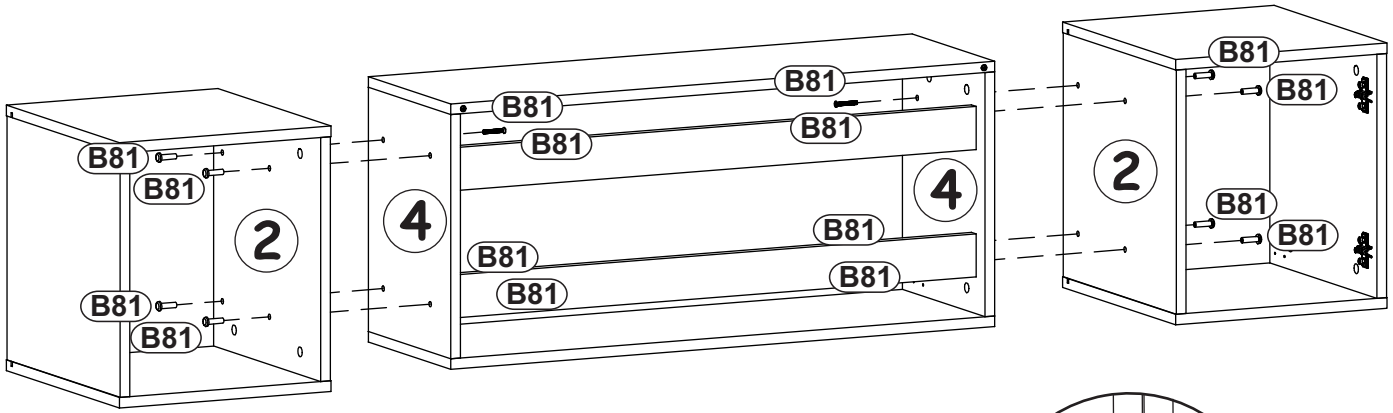

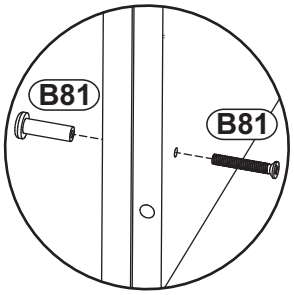

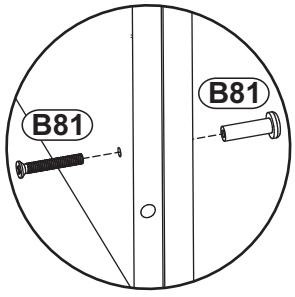

FLY 28 -- FY SBK

13

ZR1	D6
x4	x8

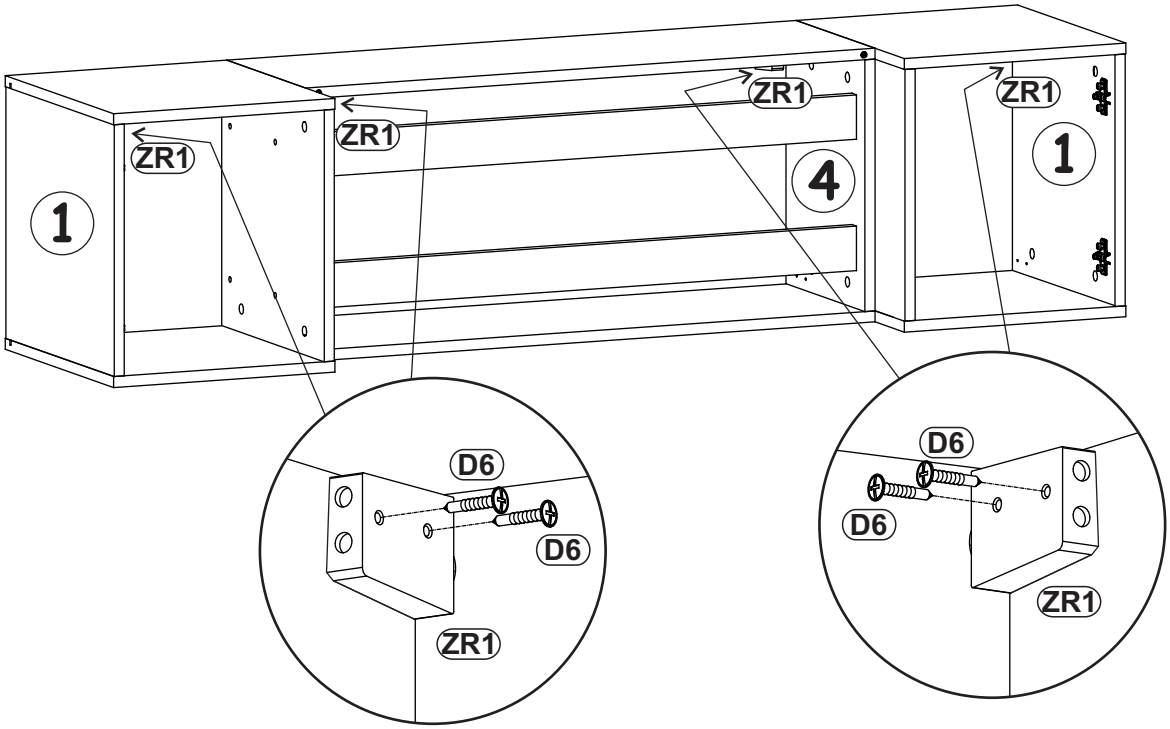

14

PI	UP13
x1	x2

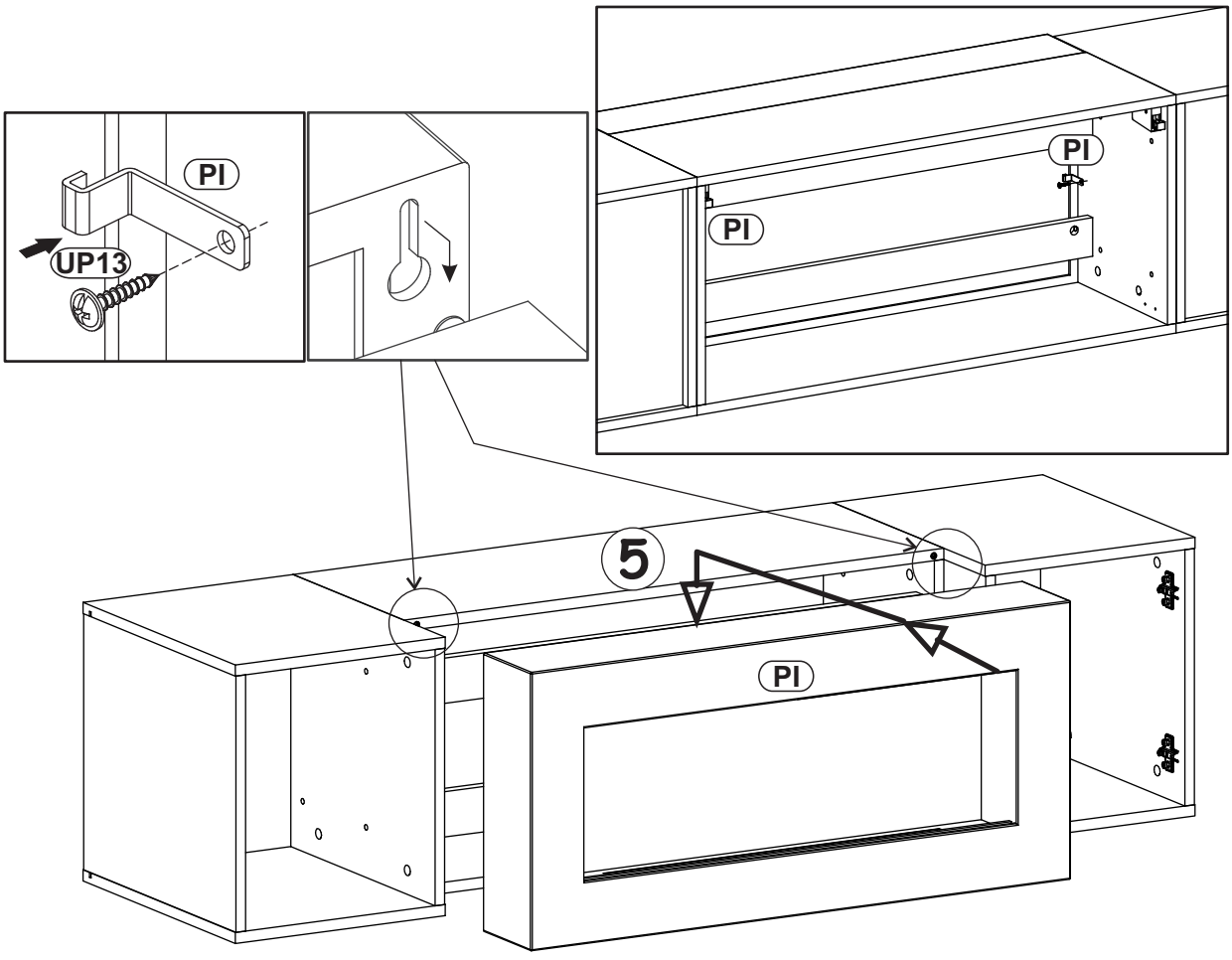

15

KR2 x4

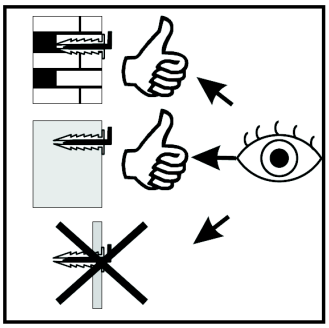

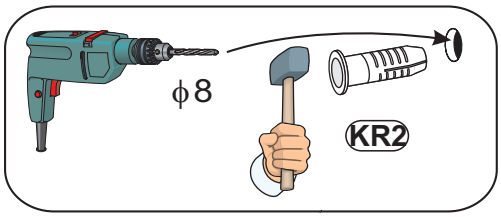

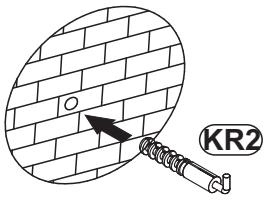

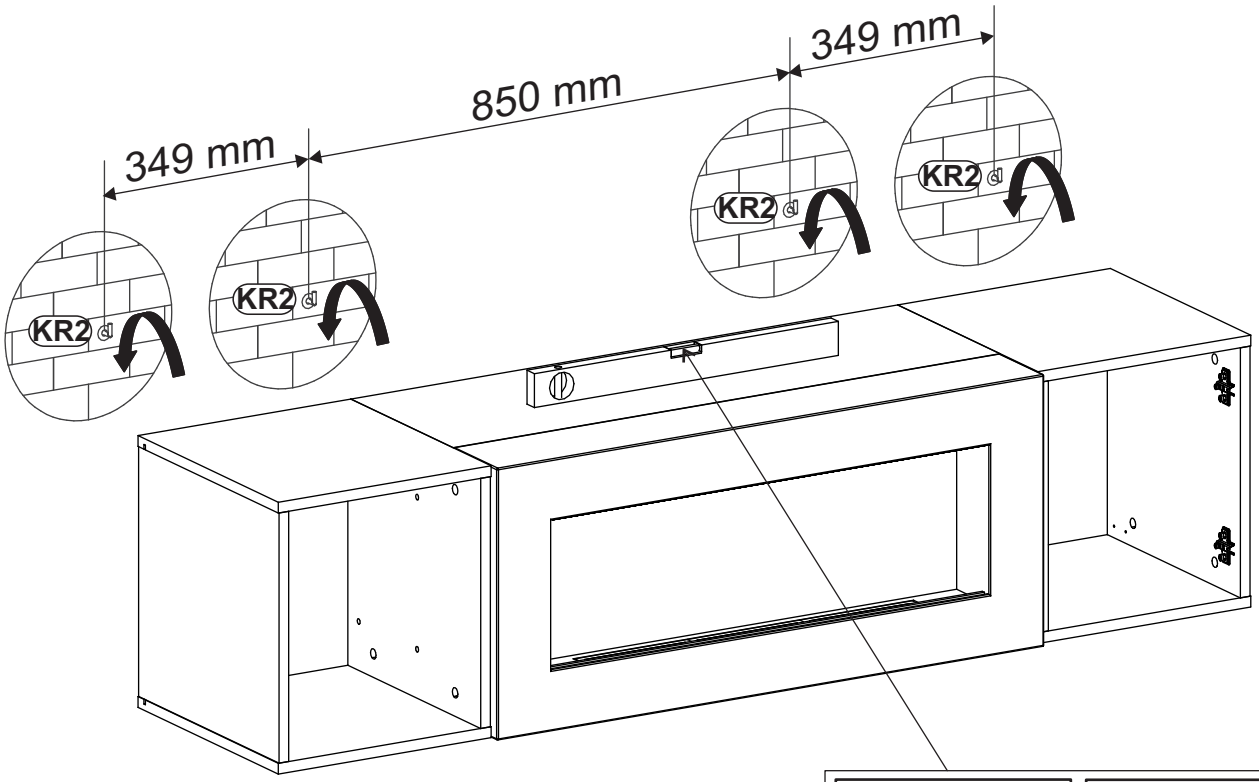

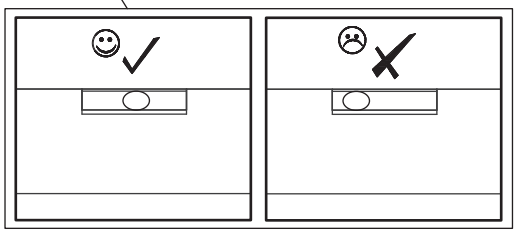

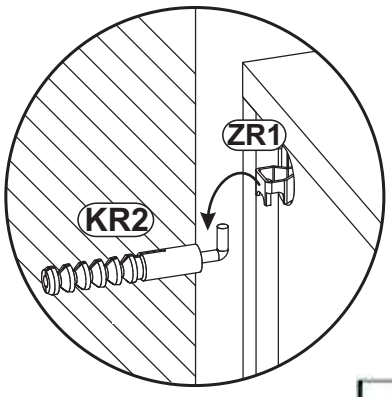

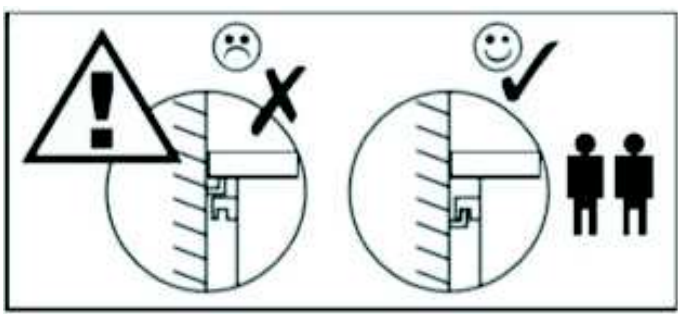

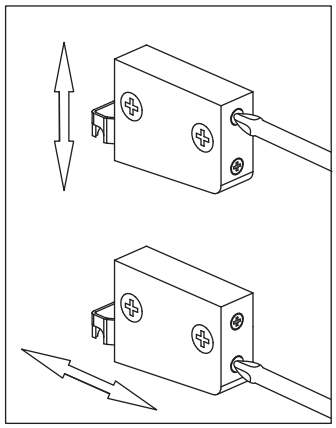

16

OD1	D10
x2	x4

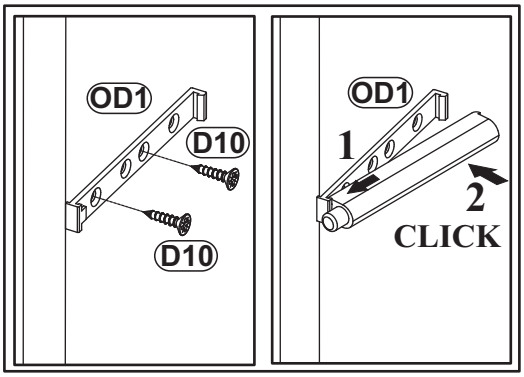

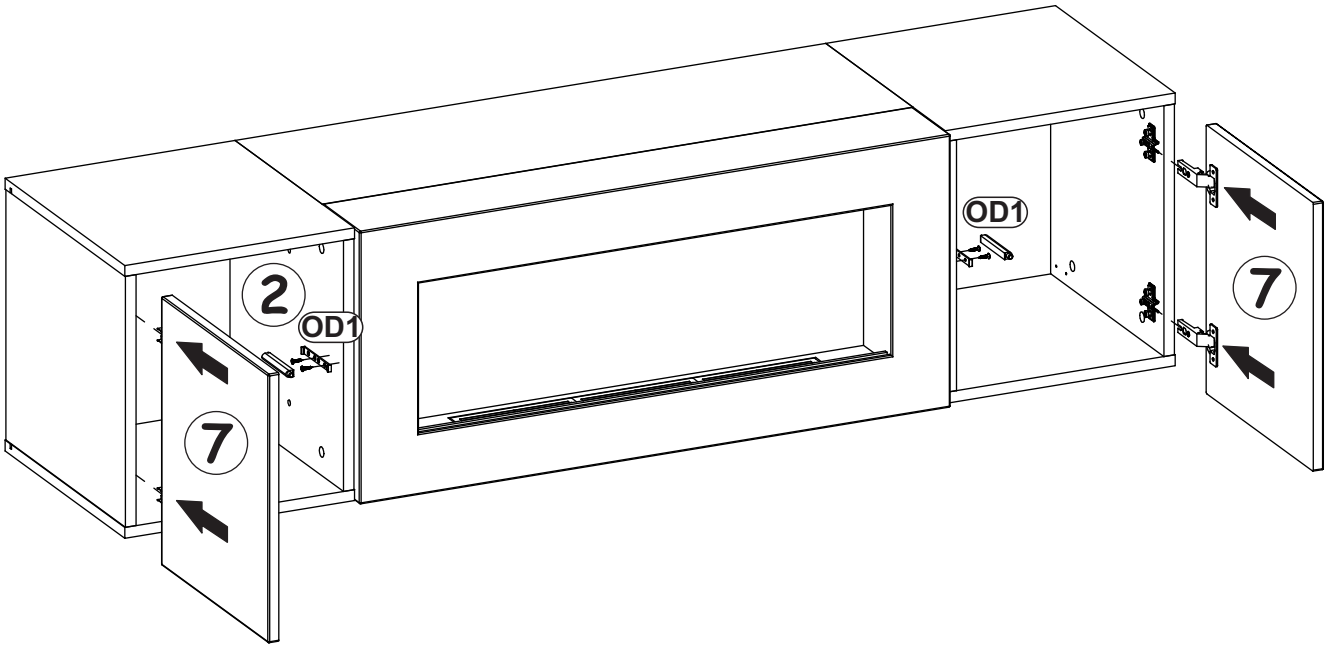

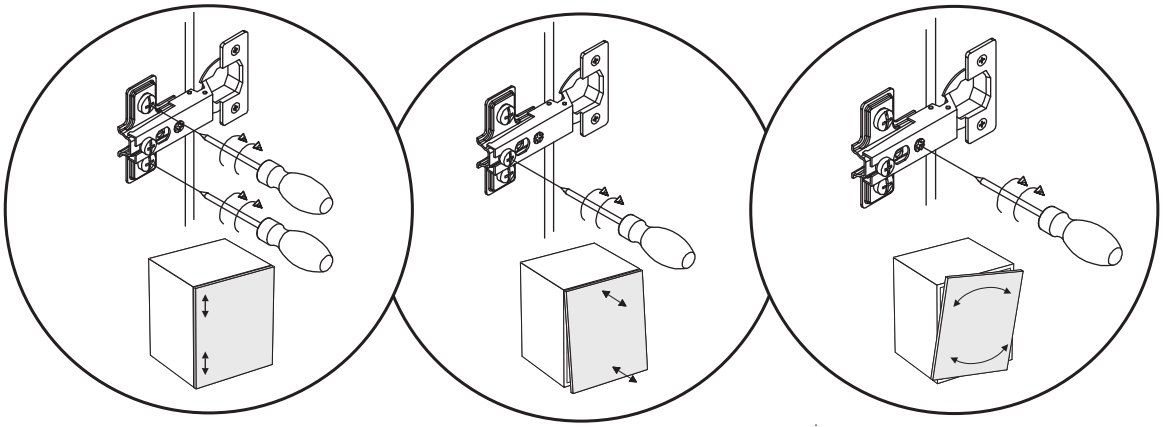
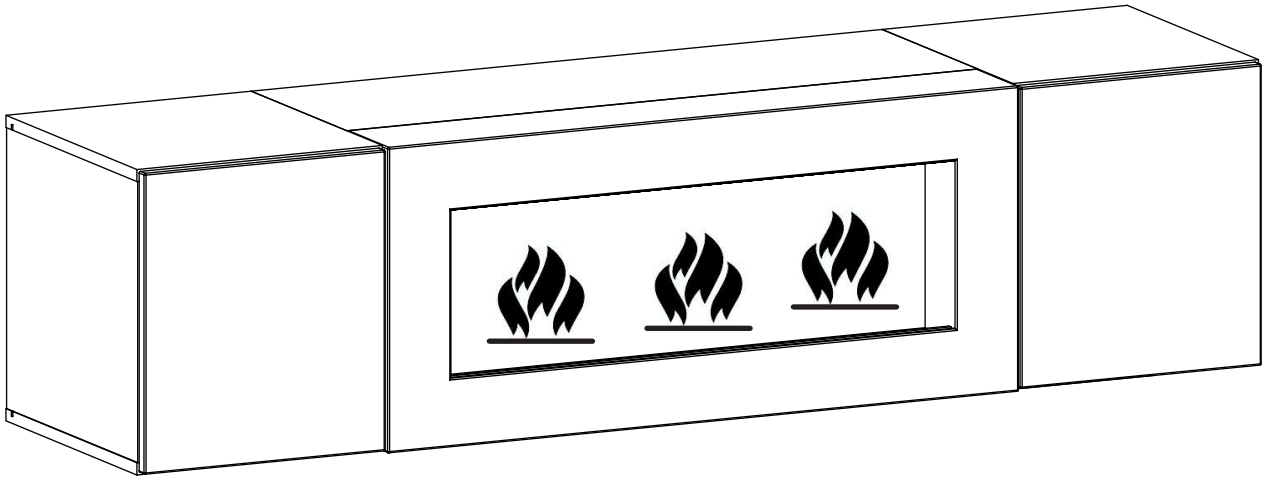
FLY 28 -- FY SBK